A1400 AIR T

EN16005:2012

safe zone

green tech

energy saving

FAAC

FAAC S.p.A. Soc. Unipersonale
Via Calari, 10 - 40069 Zola Predosa BOLOGNA - ITALY
Tel. +39 051 61724 - Fax +39 051 758518
www.faac.it - www.faacgroup.com

© Copyright FAAC SpA since 2017. All rights reserved.
No part of this manual may be reproduced, archived, distributed to third parties nor copied in any other way, in any format and with any means, be it electronic, mechanical or by photocopying, without prior written authorisation by FAAC SpA
All names and trademarks mentioned are the property of their respective manufacturers.
Customers may make copies exclusively for their own use.
This manual was published in 2017.

EC DECLARATION OF CONFORMITY OF A MACHINE

(2006/42/EC ANNEX II P.1, A)

Manufacturer and person authorised to compile the technical file

Company name: FAAC S.p.A. Soc. Unipersonale

Address: Via Calari, 10 - 40069 Zola Predosa BOLOGNA - ITALY

hereby declares that the following machine:

Description: Automatic door with 1 or 2 leaves

Model: A1400 AIR T CS

complies with the following applicable EU legislations:

Machinery Directive 2006/42/EC (including all applicable amendments)

and that the technical file has been compiled in compliance with part A of Annex VII.
Furthermore, the following harmonised standards have been applied:

EN 16005:2012
EN ISO 12100:2010
EN 60335-2-103:2015
EN 13849-1:2015 PL "c" CAT. 3
EN 13849-2:2012

Bologna, Italy 08-10-2016

CEO
A.Marcellan

EC DECLARATION OF CONFORMITY

The Manufacturer

Company name: FAAC S.p.A. Soc. Unipersonale

Address: Via Calari, 10 - 40069 Zola Predosa BOLOGNA - ITALY

hereby declares that the following products:

Description: Automation for automatic door with 1 or 2 leaves

Model: A1400 AIR KIT; A1400 AIR T;A1400 AIR T CS

comply with the following applicable EU legislations:

EMC Directive 2014/30/EU
Directive ROHS 2 2011/65/EU

Furthermore, the following harmonised standards have been applied:

EN 61000-6-2:2005
EN 61000-6-3:2007+A1:2011

Bologna, Italy 08-10-2016

CEO
A.Marcellan

DECLARATION OF INCORPORATION OF PARTLY COMPLETED MACHINERY

(2006/42/EC ANNEX II P.1, B)

Manufacturer and person authorised to prepare the relevant technical documentation

Company name: FAAC S.p.A. Soc. Unipersonale

Address: Via Calari, 10 - 40069 Zola Predosa BOLOGNA - ITALY

hereby declares that for the partly completed machinery:

Description: Automatic door with 1 or 2 leaves

Model: A1400 AIR KIT

The essential requirements of the machinery directive 2006/42/EC (as amended) which have been applied and satisfied are as follows:

RESS 1.1.2, 1.1.3, 1.1.4, 1.1.5, 1.1.6, 1.2.1, 1.2.3, 1.3.4, 1.5.1, 1.5.11, 1.5.13, 1.6.3, 1.7.1, 1.7.1.2, 1.7.4

and that the relevant technical documentation has been compiled in compliance with part B of Annex VII.
Furthermore, the following harmonised standards have been applied:

EN 16005:2012
EN ISO 12100:2010
EN 60335-2-103:2015
EN 13849-1:2015
EN 13849-2:2012

Finally, the manufacturer declares that the above-mentioned partly completed machinery must not be commissioned until the final machine in which it is to be incorporated has been declared compliant with the requirements of the same Machinery Directive 2006/42/EC.

Bologna, Italy 08-10-2016

CEO
A.Marcellan

DECLARATION OF INCORPORATION FOR PARTLY COMPLETED MACHINERY

(2006/42/EC ANNEX II P.1, B)

Manufacturer and person authorised to prepare the relevant technical documentation

Company name: FAAC S.p.A. Soc. Unipersonale

Address: Via Calari, 10 - 40069 Zola Predosa BOLOGNA - ITALY

hereby declares that for the partly completed machinery:

Description: Automatic door with 1 or 2 leaves

Model: A1400 AIR T

The essential requirements of the machinery directive 2006/42/EC (as amended) which have been applied and satisfied are as follows:

RESS 1.1.2, 1.1.3, 1.1.5, 1.1.6, 1.2.1, 1.2.3, 1.2.6, 1.3.1, 1.3.2, 1.3.3, 1.3.4, 1.4.1, 1.4.2.1, 1.5.1, 1.5.2, 1.5.4, 1.5.11, 1.5.13, 1.6.1, 1.6.3, 1.6.4, 1.6.5, 1.7.1, 1.7.1.2, 1.7.4

and that the relevant technical documentation has been compiled in compliance with part B of Annex VII.
Furthermore, the following harmonised standards have been applied:

EN 16005:2012
EN ISO 12100:2010
EN 60335-2-103:2015
EN 13849-1:2015
EN 13849-2:2012

Finally, the manufacturer declares that the above-mentioned partly completed machinery must not be commissioned until the final machine in which it is to be incorporated has been declared compliant with the requirements of the same Machinery Directive 2006/42/EC.

Bologna, Italy 08-10-2016

CEO
A.Marcellan

CONTENTS

EC Declaration of conformity of a machine ... 3
EC Declaration of conformity ... 3
Declaration of incorporation of partly completed machinery ... 4
Declaration of incorporation for partly completed machinery ... 4

1. INTRODUCTION TO THE MANUAL ... 7
1.1 Safety recommendations ... 7
Safety of the installer/maintenance technician ... 7
Workplace safety ... 7
User safety ... 7
1.2 Meaning of the symbols used ... 8

2. AUTOMATION A1400 AIR T ... 10
2.1 Intended use ... 10
Limitations for use ... 10
2.2 Unauthorised use ... 10
2.3 Identification plate ... 11
2.4 Technical specifications ... 12
2.5 Type of system supplied ... 13
Installation according to the type of system supplied ... 13
Automation system components ... 14

3. INSPECTION AND PREPARATION ... 16
3.1 Preliminary inspection ... 16
3.2 Arrangement of electrical cables ... 16

4. TRANSPORT AND RECEIPT OF THE GOODS ... 17
Handle packages ... 17
Unpack and Handle ... 17

5. CUTTING THE PROFILES ... 18

6. ASSEMBLING THE HEAD SECTION ... 19
6.1 Preparing the self-supporting head section (if used) ... 19
6.2 Assembling the components ... 20
Mechanical stops ... 20
Electronics module ... 21
Safety cables and spacers ... 22
Motor ... 22
Return PULLEY ... 22
Motor release monitor ... 23
Internal release ... 23
Motor block operation test Motor_1 ... 23
Cover drilling ... 24
Closed door monitor sensor ... 24
Emergency battery kit ... 24

7. ASSEMBLING THE A1400 AIR T CS FRAME ... 25
7.1 Entry with TK50 profiles ... 25
Preliminary operations ... 25
Assembling the frame ... 25
Fastening the fixed leaves ... 26
Mounting mobile leaves ... 26
Glazing installation ... 26
Assembly of the head section to the upper profile ... 26
7.2 Entry door with TK20 profiles ... 26
Preliminary operations ... 26
Assembling the frame ... 26
Mounting MOBILE LEAVES ... 27
Assembly of the head section to the upper profile ... 27

8. INSTALLING THE HEAD SECTION ... 28
8.1 Preliminary operations ... 28
8.2 Wall fastening ... 28
8.3 Mounting the self-supporting automation ... 29
8.4 Mount the transom ... 30

9. INSTALLING THE LEAVES ... 31
9.1 Mounting the lower shoes ... 31
Shoe with bracket TK50 ... 31
Swivel shoe TK50 ... 31
Shoe with bracket TK20 ... 31
9.2 Mount profiles on the leaves ... 32
9.3 Mount the lower sweeper ... 32
Glass leaves ... 32
9.4 Installing the leaves ... 32
9.5 PREPARING THE EXTERNAL CARRIAGES ... 33
9.6 Telescopic profile assembly ... 34
9.7 plate on telescopic profile ... 35
9.8 PREPARING EXTERNAL CARRIAGES ... 35
9.9 Steel cable fixing ... 37
9.10 Adjusting the leaves and carriages ... 38
Height of the leaves ... 38
Depth of the leaves ... 38
Counter wheel ... 38

10. INSTALLING THE GLASS LEAVES ... 39
10.1 Mounting the sweepers ... 41

11. ASSEMBLE THE BELT, CASING AND ACCESSORIES ... 42
11.1 Mounting the belt ... 42
Adjusting the belt ... 43
11.2 Belt tensioning ... 44
11.3 Adjusting the mechanical stops ... 45
Stops on opening ... 45
Double leaf closing stops ... 45
Single leaf closing stops ... 45
11.4 Mounting the side profiles ... 46
11.5 Installing the casing brackets ... 46
11.6 Fitting the cover ... 47
11.7 Installing the Motor block ... 48
11.8 Adjusting the Motor block ... 48
11.9 Align Motor block ... 49
11.11 Mounting the cable gland guides ... 49

12. MAINTENANCE ... 50
12.1 Calculation estimate of cycles performed ... 50
Routine maintenance ... 50
Periodic replacements ... 50
12.2 Maintenance technician safety ... 51
12.3 Replacements ... 51
12.4 Cleaning ... 52
12.5 Functional checks ... 53

13. WASTE DISPOSAL ... 53

14. ATTACHMENTS ... 54
14.1 Installation diagrams ... 55
A1400 AIR T with TK20 2 mobile leaves and one fixed leaf ... 55
A1400 AIR T with TK20 2 mobile leaves ... 56
A1400 AIR T with TK20 4 mobile leaves ... 57
A1400 AIR T with TK20 4 mobile leaves and 2 fixed leaves ... 58
Position of components on support profile ... 59
A1400 AIR T Right Opening Single Leaf ... 59
A1400 AIR T Left Opening Single Leaf ... 60
A140 AIR Telescopic Single Leaf Right and Left Opening ... 61
A1400 AIR T Double Leaf ... 62
A140 AIR Telescopic Double Leaf ... 63
14.2 selection MENU ... 66
14.3 PASSWORD ... 66
14.4 selection MENU ... 68

ENGLISH

Translation of the original instructions

INDEX OF TABLES

1	Symbols: notes and warnings on the instructions	8
2	Symbols: tools (type and size)	8
3	Symbols: safety signs and symbols (EN ISO 7010)	9
4	Symbols: markings on product	9
5	Symbols: Personal Protective Equipment	9
6	Symbols: markings on packaging	9
7	Technical specifications	12
8	Profile cutting measurements	18
9	Belt tensioning (measurements in mm)	44
10	Maintenance programme and periodic replacements	50
11	Automation weights	54
12	Positions of components on the head section	54

1. INTRODUCTION TO THE MANUAL

The instructions manual provides the correct procedures and requirements to be complied with for installation and operation of the system in safe conditions.

Carefully read and comply with all the instructions before starting any activity on the product.

Keep these instructions for future reference.

Unless otherwise specified, the measurements provided in the instructions are in mm.

In writing the instructions manual, due account was taken of the results of the risk assessment conducted by the manufacturer on the entire life cycle of the automation in order to implement effective risk reduction.
The following stages of the life cycle of the automation were considered:

- Consignment reception/handling
- Assembly and installation
- Setting up and commissioning
- Operation
- Maintenance / addressing any failures
- Disposal at the end of the product's life.

The sources of risk arising from installation and use of the automation were taken into account:

- Risks for the installer/maintenance technician (technical personnel)
- Risks for the user of the automation
- Risks for the product's integrity (damage)

1.1 SAFETY RECOMMENDATIONS

The installer/maintenance technician is responsible for the installation/testing of the system and for filling in the system's Register.

SAFETY OF THE INSTALLER/MAINTENANCE TECHNICIAN

Installation must be performed in compliance with Standards currently in force. The installer's safety is connected to environmental and operative conditions that reduce the risks of accidents and severe damage to a minimum.

It should be remarked that most accidents occurring in the workplace are caused by failure to comply with and monitor the most basic and fundamental safety and prevention rules.

The installer/maintenance technician must prove or declare to possess the technical-professional proficiency to perform installation, testing and maintenance activities according to the requirements of these instructions. He or she is bound to read and comply with the instructions manual.

Incorrect installation and/or incorrect use of the product might cause serious harm to people.

Perform installation and other activities adhering to the sequences provided in the instructions manual.

Always comply with all the requirements contained in the instructions and warning tables at the beginning of the paragraphs.

Do not modify the components of the automation in any way.

Only the installer and/or maintenance technician is authorised to open the automation casing.

FAAC disclaims any liability regarding the safety and proper operation of the automation if non-original FAACcomponents are used.

FAAC supplies a system register form with the A1400 AIR T CS.

WORKPLACE SAFETY

The installer/maintenance technician must be in good psycho-physical conditions, aware of and responsible about the hazards that may be engendered when using a machine.

The installation activity requires special work conditions. Furthermore, the suitable precautions must be taken to prevent risks of injury to persons or damage.

It is recommended to always comply with the safety recommendations.

Cordon off the work site and prevent access to the area.

The work area must be kept tidy and must not be left unattended.

Do not wear clothes or accessories - such as ties or bracelets - that might get caught in moving parts.

Always wear the personal protective equipment recommended for the type of activity to be carried out.

Use work instruments in good conditions.

The required level of workplace lighting must be equal to at least 200 lux.

Use the transport and lifting equipment recommended in the instructions manual.

Use safety-compliant portable ladders of adequate size, fitted with anti-slip devices at the top and bottom, equipped with retainer hooks.

USER SAFETY

The person in charge of the automation is responsible for the operation of the system.

He or she is bound to read and comply with the instructions manual.

He/she must be in good psycho-physical conditions, aware of and responsible about the hazards that may be engendered when using a machine.

The required level of ambient lighting must be equal to at least 200 lux.

The person in charge of using the automation must prevent the control devices being used by anyone who has not been specifically authorised and trained to use them. He/she must not allow access to the control devices to persons under age or with reduced psycho-physical abilities, unless under supervision by an adult responsible for their safety.

Do not use the system in case of malfunctioning.

Under no circumstances is the user authorised to perform any work inside the housing of the automation or on any of its components.

The user is not permitted to perform any type of work on the motorisation or on components of the system.

If the system malfunctions, the user must not attempt any kind of repair or take any direct action. He/she must request assistance from the INSTALLER / MAINTENANCE TECHNICIAN.

The user must make sure that maintenance to the system is carried out according to the instructions provided in this manual.

The installer/maintenance technician must provide the user with all the information required to operate the system and for emergency situations.

The installer/maintenance technician must supply the system's Register to the owner.

1.2 MEANING OF THE SYMBOLS USED

Perform the operations and steps described in compliance with safety regulations and the instructions provided so as to prevent the risks indicated by the symbols in the following tables.

1 Symbols: notes and warnings on the instructions

WARNING
It indicates the risk of personal injury or damage to parts. The described operation/step must be carried out in compliance with the instructions provided and with safety regulations.

WARNING ELECTRIC SHOCK HAZARD
Indicates risk of electrocution. The described operation/step must be carried out in compliance with the instructions provided and with safety regulations.

WARNING
Details and specifications to be followed with the utmost attention, in order to ensure correct operation of the system.

PAGE REFERENCE
It refers to the page indicated by the number for details or clarifications.

PICTURE REFERENCE
It refers to the picture indicated by the number.

TABLE REFERENCE
It refers to the table indicated by the number.

WARNING
The batteries and electronic components must not be disposed of with household waste but delivered to authorised disposal and recycling centres.

2 Symbols: tools (type and size)

HEX WRENCH of the specified size (6, 8...)

ALLEN KEY with ROUND HEAD of the specified size (6, 8...)

FLAT-HEAD SCREWDRIVER of the specified size (6, 8...)

CROSS-HEAD SCREWDRIVER of the specified size (6, 8...)

METAL DRILL BITS of the specified size (6, 8...)

MASONRY DRILL BITS of the specified size (6, 8...)

LEVEL

COUNTERSINK with specified angle (45°...)

THREADING TAP with specified thread (M6, M8...)

ROUND SAW

GLASS SUCTION CUPS

PALLET FORKS

TOOL with TORQUE ADJUSTMENT
It indicates that a tool with torque adjustment is required where necessary for safety reasons.
TIGHTENING TORQUE VALUE
The torque wrench and the tightening torque in Nm is specified in the figures. E.g.: HEX WRENCH 6 set at 2.5 Nm

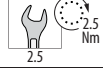

3 Symbols: safety signs and symbols (EN ISO 7010)

GENERIC HAZARD
It indicates the risk of personal injury or damage to parts.

ELECTROCUTION HAZARD
It indicates the risk of electrocution due to the presence of live parts.

RISK OF CRUSHING AND MUSCULO-SKELETAL DISORDERS
It indicates the risk of crushing and musculo-skeletal disorders due to lifting heavy parts.

BURNING OR SCALDING HAZARD
It indicates the risk of burning or scalding due to the presence of parts at high temperature.

CRUSHING HAZARD
It indicates the risk of crushing hands/feet due to the presence of heavy parts.

RISK OF CRUSHING HANDS
It indicates the risk of crushing hands due to the presence of moving parts.

CUTTING/AMPUTATION/PIERCING HAZARD
It indicates the risk of cutting due to the presence of sharp parts or using pointed tools (drill).

SHEARING HAZARD
It indicates the risk of shearing due to moving parts.

RISK OF IMPACT/CRUSHING
It indicates the risk of impact or crushing due to moving parts.

FALLING OBJECTS HAZARD
It indicates the risk of impact due to falling objects.

SPENT BATTERIES HAZARD
It indicates a risk for the environment and health arising from spent batteries due to possible leakage of the liquid content.

COLLISION WITH FORKLIFT TRUCKS HAZARD
It indicates a risk of collision/impact with forklift trucks.

4 Symbols: markings on product

Obligation to read the instructions

5 Symbols: Personal Protective Equipment

Personal protective equipment to be worn for protection from any risks (e.g. crushing, cutting, shearing, etc.):

Obligation to wear head protection helmet.

Obligation to wear safety footwear.

Obligation to wear mask/goggles to protect the eyes from the risk of fragments due to the use of drill or welder.

Obligation to wear work gloves.

Obligation to wear ear protectors.

Obligation to wear overalls. Do not wear clothes or accessories - such as ties or bracelets - that might get caught in moving parts.

6 Symbols: markings on packaging

Important warnings for the safety of people and integrity of the load:

Handle with care. Presence of fragile parts.

Store away from water and humidity.

PROHIBITION to stack items.

Maximum number of stackable items, e.g.: 2.

Wear work gloves.

Wear safety footwear.

Use pallet trucks.

Use forklift trucks.

20 kg is the MAX weight that 1 person can lift.

Kg _____ WEIGHT of the load.

2. AUTOMATION A1400 AIR T

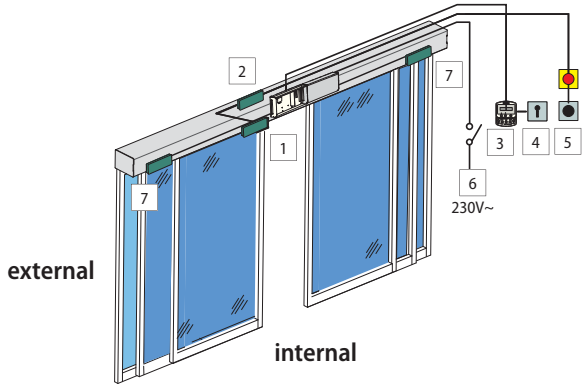

1	Internal monitored opening detector and safety in closing (XV1/XDT1)	included in the supply
2	External monitored opening detector and safety in closing (XV1/XDT1)	optional accessory
3	SDK EVO	optional accessory
4	Key switch to lock the SDK EVO	optional accessory
5	Emergency/Key/OPEN control buttons	optional accessories
6	Power supply 230V~	
7	Internal monitored detectors for safe opening (XBFA)	optional accessory

1

2.1 INTENDED USE

The FAAC A1400 AIR T series systems are designed to automatically operate, manage and control linear horizontal motion one- or two-leaf sliding doors. The A1400 AIR T series automations are designed to automate entry doors that are used exclusively for pedestrian traffic.
They are compliant with standard EN 16005:2012.
They are suitable for indoor installation, for applications that meet the specifications indicated in ⊞ **7**.

No other use outside the ones set out above is allowed by the manufacturer.

FAAC declines all liability deriving from misuse or uses other than that for which the automation s intended.

LIMITATIONS FOR USE

Do not use the automation in the presence of the following conditions:

- direct exposure to weathering
- exposure to direct water jets of any type or extent
- outside the technical limitations set out. Specifically, it is forbidden to connect to sources of energy other than those set out.

2.2 UNAUTHORISED USE

It is forbidden to:

- use the automation for uses other than THE INTENDED USE;
- use the automation for installing smoke and/or fire protection doors (fire doors);
- install integral anti-panic breakout systems (APN) on A1400 AIR T series doors;
- use the automation with mobile and fixed guards tampered with or removed;
- use the automation in environments in which there is a risk of explosion and/or fire: the presence of flammable gases or fumes is a serious safety hazard (the product is not 94/9/EC ATEX certified);
- integrate other systems and/or commercial equipment not intended;
- use other systems and/or commercial equipment for uses not authorised by the respective manufacturers;
- use commercial devices for purposes other than those set out by the respective manufacturers.

2.3 IDENTIFICATION PLATE

The identification plate ✎2-1 is located on the support profile.

If the A1400 AIR KIT is supplied, it is the responsibility of the installer to attach the identification plate in a visible position ✎2- 1.

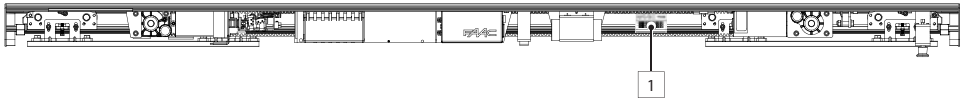

IDENTIFICATION NUMBER example:

✎2

2.4 TECHNICAL SPECIFICATIONS

7 Technical specifications

MODEL	A1400 AIR T single leaf	A1400 AIR T double leaf
Length * [mm]	from 1750 to 4600	from 2200 to 6100
Depth * [mm]	234	234
Total depth with self-supporting beam * [mm]	289	289
Height * [mm]	100	100
Weight** [kg]	MIN. 25 - MAX 43	MIN. 31 - MAX. 55
No. of leaves	2	4
MAX. leaf weight [kg]	110+110	60+60+60+60
Passage opening (Vp) [mm]	from 1100 to 3000	from 1400 to 4000
Beam length [mm]	Vp x 1.5 +100	Vp x 1.5 +100
Maximum framed leaf thickness [mm]	65	65
Power supply voltage	230 V~ (+6% -10%) 50 Hz	230 V~(+6% -10%) 50 Hz
MAX absorbed power [W]	140	140
Stand-by power without accessories	3	3
Use frequency	100 %	100 %
Main motor (with encoder)	powered at 36V	powered at 36V
Max. accessories load	1A, 24V (excluding SDK EVO)	1A, 24V (excluding SDK EVO)
Time/date backup battery	Lithium CR2032 3V	Lithium CR2032 3V
Motion backup battery	NiMh 24V 1800mAh	NiMh 24V 1800mAh
Traction	by toothed belt	by toothed belt
Opening/closing speed adjustment (empty) [cm/s]	10... 75	20... 150
Partial opening adjustment	5%... 95% of total opening	5%... 95% of total opening
Pause time adjustment [s]	0... 30	0... 30
Night pause time adjustment [s]	0... 240	0... 240
Anti-crushing safety device	in opening/closing	in opening/closing
Protection sensors monitoring (EN 16005:2012)	can be bypassed	can be bypassed
Energy Saving function	can be enabled	can be enabled
Low Energymovement	can be enabled	can be enabled
Operating ambient temperature [°C]	-20... +55	-20... +55
Automation protection rating	IP 23 (internal use)	IP 23 (internal use)

* The dimensions and weight of the automation are specified excluding carriage and leaf overall dimensions, which are customisable
** For the specifications of weights in relation to the length of the automation, see **11**.

2.5 TYPE OF SYSTEM SUPPLIED

The FAAC A1400 AIR T series automations may be supplied as follows:

- Automation kit: A1400 AIR KIT
- Assembled automation: A1400 AIR T
- Complete entry door: A1400 AIR T CS

INSTALLATION ACCORDING TO THE TYPE OF SYSTEM SUPPLIED

During installation, it is recommended to comply with the order of the sections set out based on the type of purchased supply.

A1400 AIR KIT

A. Pack containing automation components to be assembled on the FAAC support profile.

B. Pack with FAAC profiles purchased in 4.30 m or 6.10 m long bars.

Sequence of installation phases (dedicated sections in the instructions manual)

- Inspection and preparation (§ 3)
- Cutting the profiles (§ 5)
- Installation of the head section: assembly of the components on the support profile (use exclusively FAAC profiles) (§ 6)
- Installation of the head section (§ 8)
- Installation of the leaves (§ 9) - for glass leaves see (§ 10)
- Electronics installation (§ 12)
- Startup (§ 13)

A1400 AIR T

C. Automation assembled on FAAC* head section.

Sequence of installation phases (dedicated sections in the instructions manual)

- Inspection and preparation (§ 3)
- Installation of the head section (§ 8)
- Installation of the leaves (§ 9) - for glass leaves see (§ 10)
- Electronics installation (§ 12)
- Startup (§ 13)

A1400 AIR T CS

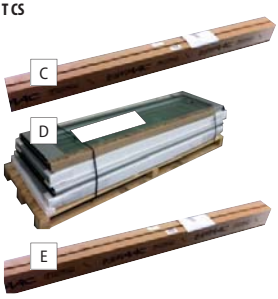

C. Automation assembled on FAAC* head section.

D. FAAC leaves (with TK20 or TK50 profiles)

E. Package with TK20 or TK50 profiles for installing the FAAC door wall frame.

Sequence of installation phases (dedicated sections in the instructions manual)

- Inspection and preparation (§ 3)
- Installation of the door wall frame (§ 8) with FAAC - TK50 or TK20 profiles.
- Installation of the head section (§ 8)
- Installation of the leaves (§ 9) - for glass leaves see (§ 10)
- Electronics installation (§ 12)
- Startup (§ 13)

* supplied with the required measurement and with pre-assembled automation components.

AUTOMATION SYSTEM COMPONENTS

Support profile

It lets you adequately fasten the automation along a load-bearing metal or masonry wall.

Self-supporting profile KIT - OPTIONAL

To fasten the head section to the side walls. In cases where there is no load bearing wall to fasten the support profile, or if the wall is not smooth.

The kit includes:

- Self-supporting profile to be assembled to the support profile to obtain a self-supporting head section.
- 2 Sides to fasten the head section to the side walls.
- Transom Profiles to lock any transom panel installed above the self-supporting profile.

CLOSING front CASING PROFILE (H100)

Aluminium profile for front head section closure.

Plates with screws

Accessories for installation of components.

Motor_with encoder

Return pulley

Leaf Support/Sliding Carriages - (2 for each leaf)

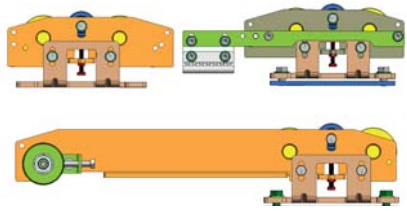

Transmission Belt

⚠ It is compulsory to use the FAAC belt for the A1400 AIR T

Control electronics module

E1SL electronic board and power supply unit.

ENGLISH

Translation of the original instructions

Motor block and Internal release - OPTIONAL

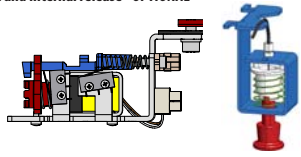

It acts directly on Motor_1 mechanically locking it to maintain leaf position.

Supplied with internal release device which allows emergency opening to be performed in case of need.

Ready for installing external release.

Monitoring - OPTIONAL

The magnetic monitoring sensor detects the door status: closed/not closed It is fitted with connector for connecting a relay (e.g. to connect an alarm system).

The monitoring micro switch on the motor block detects any malfunction. It is ready to remotely activate a light or sound warning.

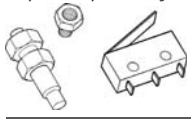

XM BLOCK motor block - OPTIONAL

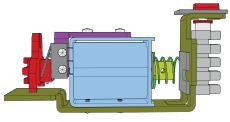

It acts directly on Motor_1 mechanically locking it to maintain leaf position.

Emergency battery

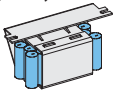

It allows the automation to operate in case of mains power failure.

SDK EVO - OPTIONAL

Programming and function selector device with display.

LK EVO - OPTIONAL

Programming and function selector device with display.

KS EVO - OPTIONAL

Device with function selector key without display.

TK50 - Sliding shoes with bracket - OPTIONAL

For fastening to wall or fixed leaf (supplied in a PAIR).

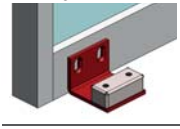

TK50 - Swivel sliding shoes - OPTIONAL

For fastening to the floor (supplied in a PAIR).

TK20 - Sliding shoes with bracket - OPTIONAL

For fastening to fixed leaf (supplied in a PAIR).

Lower guide profile - OPTIONAL

To adapt the lower leaf profile to the sliding shoe.

Supplied in 3.0 m long bars.

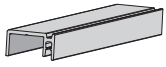

Upper profile for connecting the leaf - (1 for each leaf) - OPTIONAL

Accessory to adapt the upper leaf profile to the carriage connections.

Supplied in 3.0 m long bars.

Sweeper for lower guide profile (H19 or H25) - OPTIONAL

Completes the floor guide system.

Glass leaf lower shoes - OPTIONAL

For glass leaf sliding.

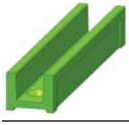

Glass leaf gripper - OPTIONAL

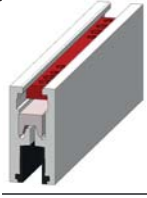

3. INSPECTION AND PREPARATION

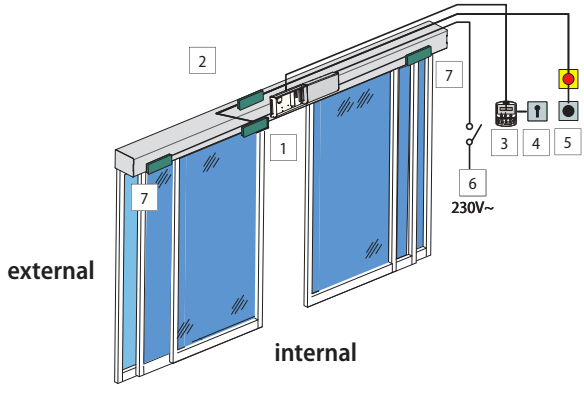

1	Internal monitored opening detector and safety in closing (XV1/XDT1)	included in the supply
2	External monitored opening detector and safety in closing (XV1/XDT1)	optional accessory
3	SDK EVO	optional accessory
4	Key switch to lock the SDK EVO	optional accessory
5	Emergency/Key/OPEN control buttons	optional accessories
6	Power supply 230V~	
7	Internal monitored detectors for safe opening (XBFA)	optional accessory

3

3.1 PRELIMINARY INSPECTION

Prior to installation, check soundness of the load bearing masonry structure and door. Perform any required work to assure:

- solidity, stability and absence of any risk of detachment or collapse of the masonry structure, fixed door frame and automation
- level flooring, without any friction/hindrance to smooth leaf sliding
- absence of sharp edges (cutting hazard)
- absence of protruding parts (hooking/entrainment hazard)

3.2 ARRANGEMENT OF ELECTRICAL CABLES

Always shut off the power supply before performing any work. If the disconnect switch is not in view, apply a warning sign stating "WARNING - Maintenance in Progress".

The electrical system must comply with applicable legislation in the country of installation.

Use components and materials with CE marking which are compliant with the Low Voltage Directive 2014/35/EU and EMC Directive 2014/30/EU.

The power supply line for the automation must be fitted with a multi-pole circuit breaker, with a suitable tripping threshold, a contact opening distance of at least 3 mm and a breaking capacity that complies with current regulations.

The power supply for the automation must be fitted with a 30 mA differential switch.

The metal parts of the structure must be earthed.

Check that the protective earthing system complies with applicable regulations in the country of installation.

The electrical cables of the automation system must be of a size and insulation class that is compliant with current legislation and laid in appropriate rigid or flexible conduits, either above or below ground.

Use separate conduits for the power supply and the 12-24 V control devices / accessories cables.

Check buried cable plans to ensure that there are no other electrical cables in proximity to the planned digging/drilling locations to prevent the risk of electrocution.

Check that there are no pipes in the vicinity as well.

The conduit fittings and the cable glands must prevent the entry of moisture, insects and small animals.

Protect extension connections using junction boxes with an IP 67 protection rating or higher.

The control accessories must be positioned in areas that are always accessible and not dangerous for the user. It is recommended to position the control accessories within the field of view of the automation.

If an emergency stop button has been installed, it must be EN13850 compliant.

Comply with the following heights from the ground:

- control accessories = minimum 150 cm
- emergency buttons = maximum 120 cm

If the manual controls are intended to be used by disabled or infirm persons, highlight them with suitable pictograms and make sure that these users are able to access them.

4. TRANSPORT AND RECEIPT OF THE GOODS

HANDLE PACKAGES

Always comply with instructions on the package.

The NET WEIGHT is indicated on the package.

PALLETISED SUPPLY

RISKS

PERSONAL PROTECTIVE EQUIPMENT

REQUIRED TOOLS

SINGLE PACKAGE

RISKS

PERSONAL PROTECTIVE EQUIPMENT

REQUIRED TOOLS

For manual lifting, there should be 1 person for every 20 kg to be lifted.

UNPACK AND HANDLE

RISKS

PERSONAL PROTECTIVE EQUIPMENT

REQUIRED TOOLS

For manual lifting, arrange for an adequate number of people for the weight of the leaf: 1 person for every 20 kg to be lifted.

1. Open and remove all packaging elements.
2. Ensure all components requested are present and undamaged (§ 2.5 - **14**).

If the goods supplied are non-compliant, proceed as indicated in the General Conditions of Sale listed in the sales catalogue and which can be consulted on the website www.faacgroup.com.

The unpackaged goods must be handled manually.

Should transport be required, the products must be suitably packaged.

Discard the packaging after use in the appropriate containers in compliance with waste disposal regulations.

The packaging materials (plastic, polystyrene, etc.) must not be left within reach of children as they are potential sources of danger.

5. CUTTING THE PROFILES

If the A1400 AIR KIT has been supplied, the profiles must be cut to the size indicated. This operation is performed in the shop. After cutting, assemble the components to the support profile.

Handling instructions: 17.

RISKS

PERSONAL PROTECTIVE EQUIPMENT

REQUIRED TOOLS

Use a circular or linear saw cutting machine with blade suitable for cutting metals.

It is forbidden to use a hand saw.

Only use equipment in good conditions and fitted with all the required safety devices.

Always comply with the instructions provided by the equipment's manufacturer.

Cutting operations may only be performed by personnel authorised to use the equipment.

Cut to size according to the measurements indicated in 8.

8 Profile cutting measurements

Profile to be cut	Cutting measurement [mm]
- Support profile - Head section cover - Self-supporting profile (OPTIONAL)	**Lt = Vp x 1.5+ 100** The head section length (Lt) must be calculated based on the measurement of the transit space (Vp). 100 mm is the overlap between leaves (50 + 50). If the overlap is different, the Lt measurement varies accordingly. The transit space measurement (Vp) taken on the installation must already be known when placing the order since the profiles can be supplied in 6100 mm-long bars.
- Leaf connection profile (OPTIONAL) - Lower guide profile (OPTIONAL)	**La** The leaf width measurement (La) depends on the transit space measurement (Vp), on the number of leaves and the planned overlap.

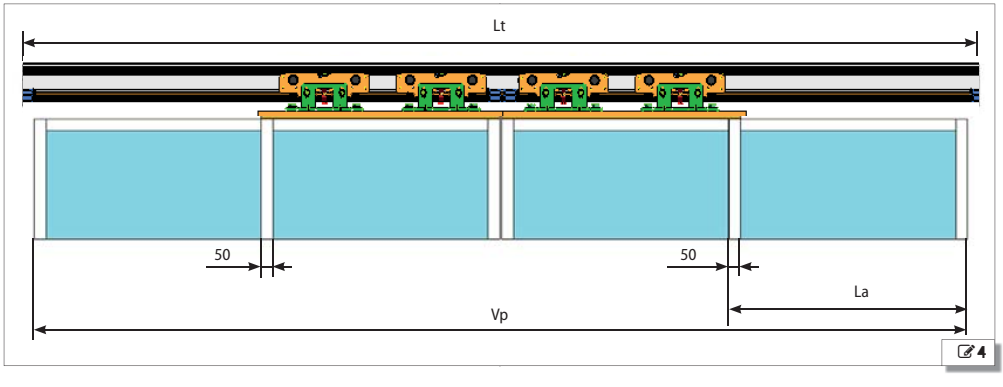

6. ASSEMBLING THE HEAD SECTION

If the A1400 AIR KIT has been supplied, the components must be installed on the support profile. This operation is performed in the shop. The assembled head section is then moved to the installation site.

For handling instructions see 17.

RISKS

PERSONAL PROTECTIVE EQUIPMENT

REQUIRED TOOLS

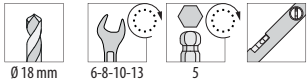

A torque wrench must be used to achieve the specified fastening torques (Nm).

For manual lifting, arrange for an adequate number of people for the weight of the leaf: 1 person for every 20 kg to be lifted.

6.1 PREPARING THE SELF-SUPPORTING HEAD SECTION (if used)

ONLY in cases where the head section is to be fastened to the side walls, the self-supporting head section must be prepared:

the support profile, self-supporting profile and the side brackets are assembled before assembling the automation components.

1. Fasten the support profile to the self-supporting profile 5-①:
   - start fastening at a vertical slot at one end and a horizontal slot at the other end.

   Check the horizontal with a spirit level.
   - proceed with the other fastenings at a 200 mm distance; alternate vertical and horizontal slots.
2. Fasten the side brackets at the ends:
   - position the plates into their housings and fasten the 2 side brackets to the ends of the support profile and self-supporting profile 5-②.

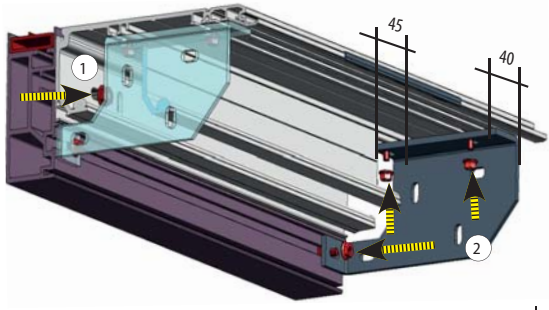

use the screws and the plates supplied

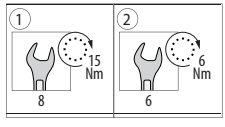

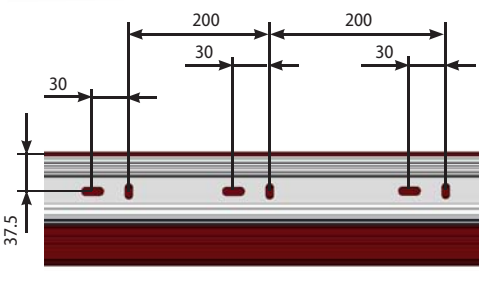

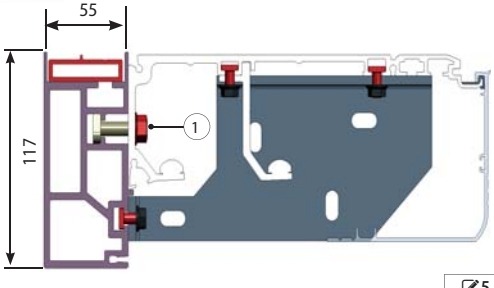

5

ENGLISH

Translation of the original instructions

6.2 ASSEMBLING THE COMPONENTS

Keep to the positions indicated in the relevant diagram: 59/60/62.

MECHANICAL STOPS

SINGLE LEAF: 4 mechanical stops are required. Place them at the two ends of the profile to begin with.

DOUBLE LEAF: 8 mechanical stops are required. Place 4 of them at the two ends of the profile and 4 in the middle to begin with.

1. Insert the mechanical stops from the side or front 6-①.
2. Make sure that they are resting in the correct position on the profile - 6-② and temporarily fasten each mechanical stop 6-③.

After assembling the leaves, the stops' positions must be adjusted.

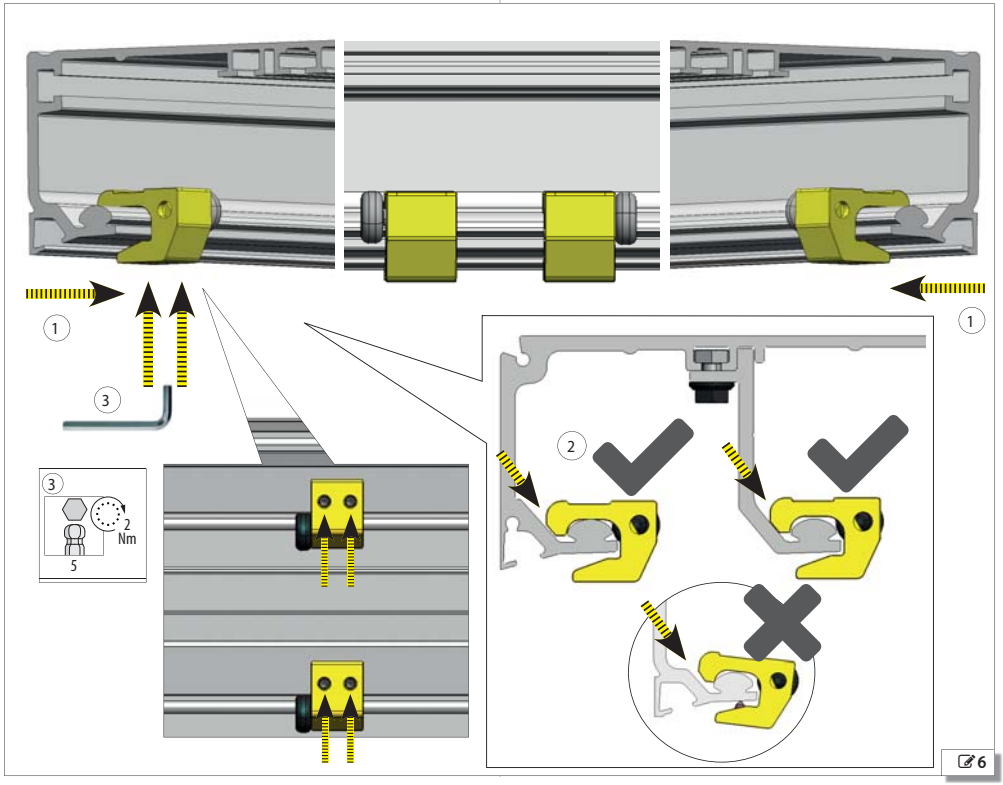

ELECTRONICS MODULE

1. Insert the screws with plate into the 2 slots as indicated in 7-①
2. Insert the electronics module into the profile from the side using the 2 plates 7-②.

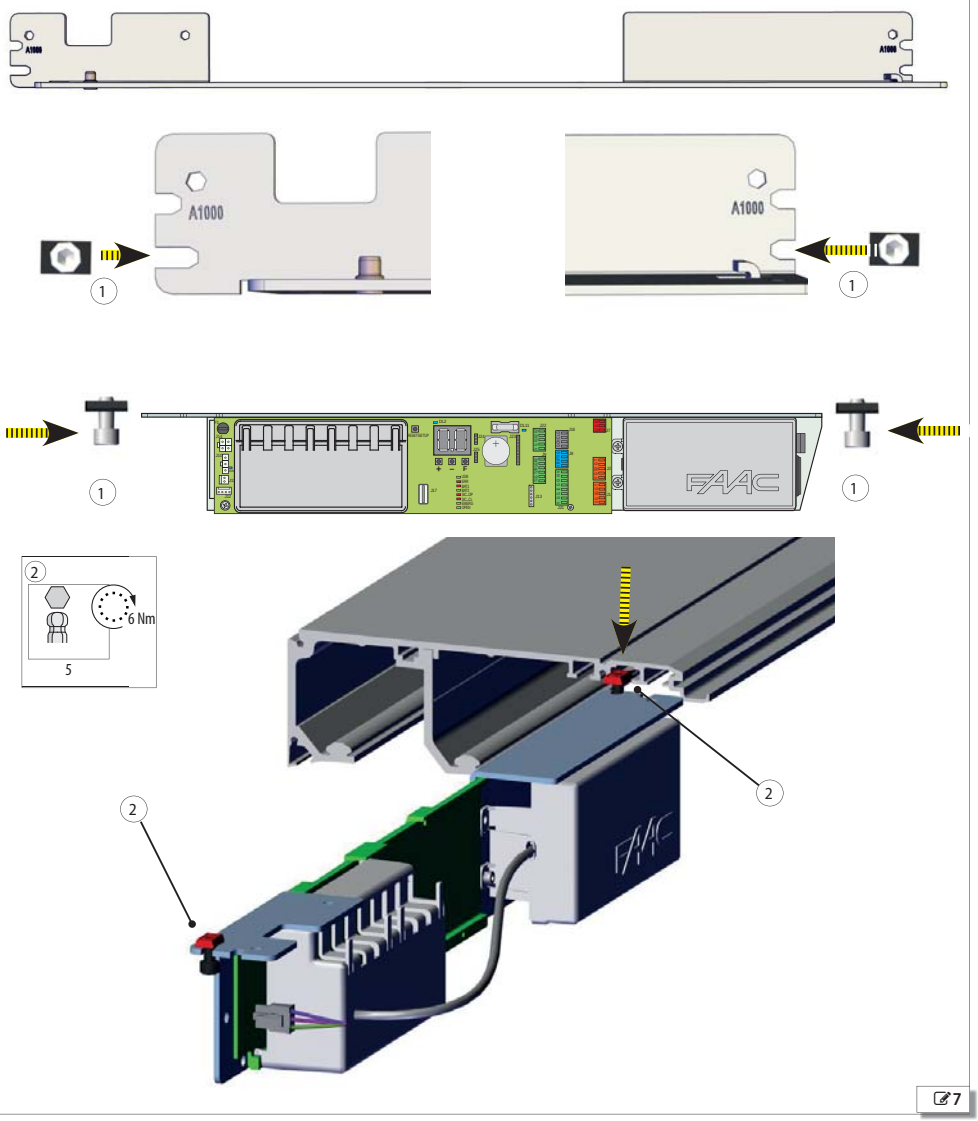

7

SAFETY CABLES AND SPACERS

1. Insert the largest end of each cable into the support profile **8**-①.
2. Insert 2 vibration damper spacers **8**-② onto the edge of the profile. In the case of profiles longer than 3 m, add a spacer in the middle **8**-③.

MOTOR

1. Insert the motor in the side of the support profile.
2. Fasten using the 3 plates with screws **9**-②.

RETURN PULLEY

1. Insert the return pulley from the side **10**-①.
2. Fasten using the 2 plates with screws **10**-②.

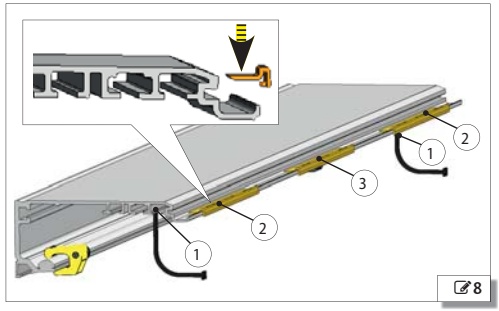

8

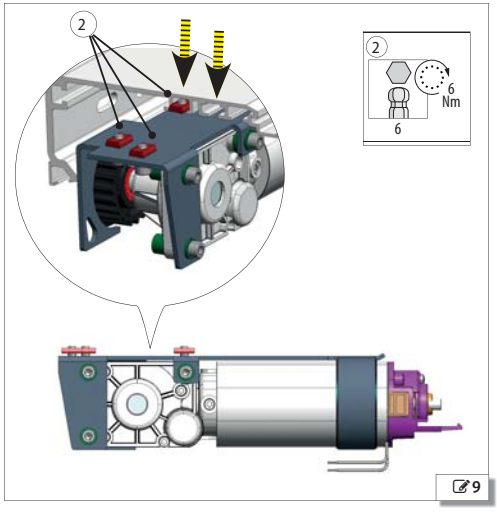

9

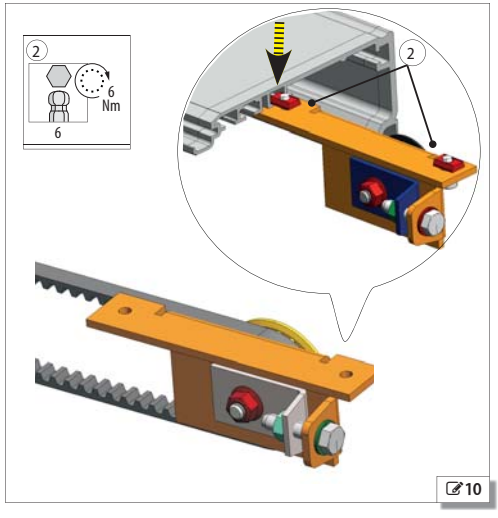

10

MOTOR RELEASE MONITOR

(OPTIONAL ACCESSORY)
Install the micro switch on the motor block **13**.

INTERNAL RELEASE

The knob must be unscrewed and removed to open the automation casing after mounting the internal release.

1. Turn the adjustment nut, with the relative locknut **11**-①.
2. Extract about 20 cm steel cable from the sheath. Insert the cable into the adjustment nut and pass it into the release device **11**-②.
3. Tighten the screw **11**-③ to lock the steel cable.
4. Move the black cable sheath against the adjustment screw and screw the adjustment screw fully into the bracket.
5. Insert two plates into the profile **14**-① and install the release knob on the side bracket.
6. Lock the knob: pull and turn it by 90° **11**. The knob must maintain this position.
7. Run the cable with sheath into the suitable cable ducts up to the motor block. Avoid bending the sheath too tightly.
8. Bring the cable with sheath close to part ② **12** and remove any excess sheath.
9. Feed the cable into the guide **12**-② so that the sheath is in contact with it. Insert the cable into the clamp ③.
10. Pull the block ⑧ as far as it will go, compressing the springs. Tighten the clamp screw ③ to lock the steel cable.
11. Cut the excess steel cable.

MOTOR BLOCK OPERATION TEST MOTOR_1

The motor must be free to move: motor block not engaged in the motor shaft coupling.

- Use the adjustment nut to regulate the tension of the cable **11**-①.

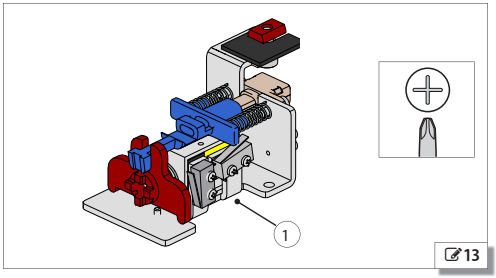

13

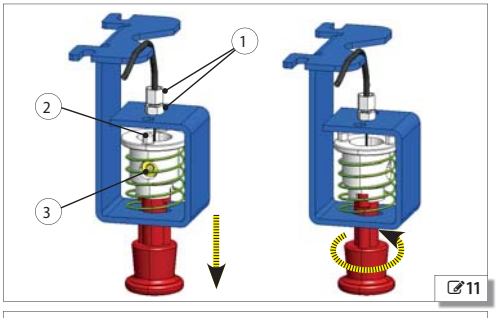

11

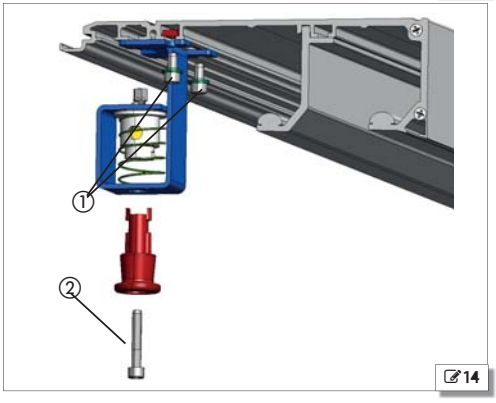

14

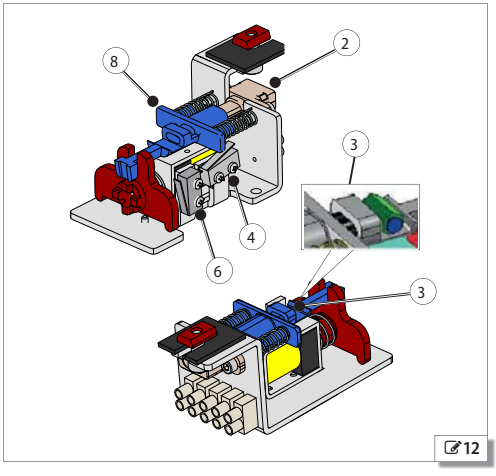

12

ENGLISH

Translation of the original instructions

- Unlock the knob by turning it 90° and ensure the release is working.
- Pull the knob to make sure that the door opening micro switch is activated (12-④).

If installation of the external release is required, use suitable key buttons. Insert the release cable in the suitable housing in the motor block.

COVER DRILLING

Make a 18 mm diameter hole on the lengthways marking of the cover (15-①). The hole must be centred with respect to the release knob.

CLOSED DOOR MONITOR SENSOR

(OPTIONAL ACCESSORY)

Assemble the magnet on the carriage closest to the closing stop.

1. Screw the magnet (16-①) onto the carriage (use the threaded hole normally used to attach the belt).
2. Install the sensor onto the bracket using the plastic nuts (16-②).
3. Insert a threaded plate with screw into seat on the support profile and fasten the bracket (16-③).

After installing the door the position must be checked to ensure sensor and magnet are aligned when the door is closed.

EMERGENCY BATTERY KIT

1. Insert two plates into the support profile as shown in (17).
2. Fasten the battery support onto the support profile using the 2 screws and washers (provided).

Check the date on the label of the emergency battery through the window on the battery support plate (17-③)

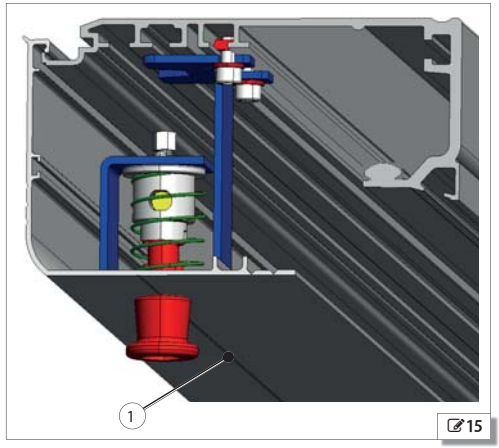

15

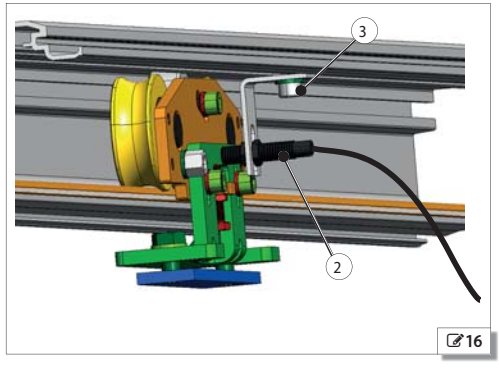

16

IDENTIFICATION NUMBER
example:

75501500 2015

Sale code

year of manufacture (yyyy)

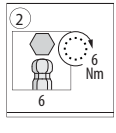

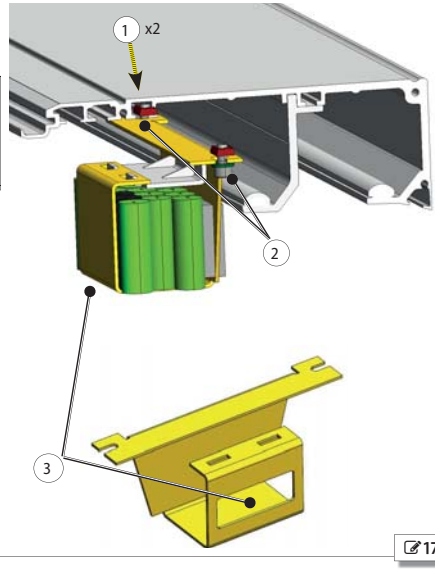

17

7. ASSEMBLING THE A1400 AIR T CS FRAME

RISKS

PERSONAL PROTECTIVE EQUIPMENT

REQUIRED TOOLS

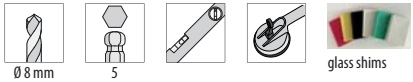

A torque wrench must be used to achieve the specified fastening torques (Nm).

When ordering the door frame, remember to take into account that the opening safety clearances must be as indicated in standard EN 16005:2012 since no opening protection detectors can be installed on the A1400 AIR T door.

For manual lifting, arrange for an adequate number of people for the weight of the leaf: 1 person for every 20 kg to be lifted.

7.1 ENTRY WITH TK50 PROFILES

PRELIMINARY OPERATIONS

1. Check soundness of the installation opening (Masonry, Structural Metal Work etc.).
2. Take the measurements of the opening.

The door frame must be fastened to the structure with suitable fasteners (dowels, self-tapping screws etc.).

3. Measure the door frame and compare them with the opening measurements.
4. Check floor levelness with a spirit level.

Ensure there are no hydraulic coils or electrical conduits under the floor at the planned drill points.

ASSEMBLING THE FRAME

The supply includes:

- upper head section with reinforcement counter-plate for A1400 AIR T
- 2 mobile leaves assembled with or without glazing
- 2 fixed side leaves without glazing to be assembled with upper head section
- seal for fixed glass leaves
- frame assembly screws kit

1. Mount the upper balancing profile on the opening (STD solution) **19**-①.
2. Fasten with appropriate screws with minimum 500 mm pitch.
3. Assemble the entry door parts, consisting of 2 leaves open at the top and connect it to the head section connection profile, by means of the connecting bracket shown **19**-②. Join the head section to the profile using the supplied screw kit.
4. Lift the assembled entry door.
5. Place the entry door in the opening and insert it into the top balancing profile.
6. Check levelness with a spirit level.
7. Fasten the side balancing profiles using suitable screws next to the grub screws **20**-③.
8. Check verticality with a spirit level.
9. Adjust the distance between the leaf profile and balancing profile using the grub screws on the profile **20**-③. This adjustment corrects any flaws on the wall surface.
10. Check proper vertical and horizontal alignment.
11. Fasten the fixed leaf sides as shown in **20**-④.

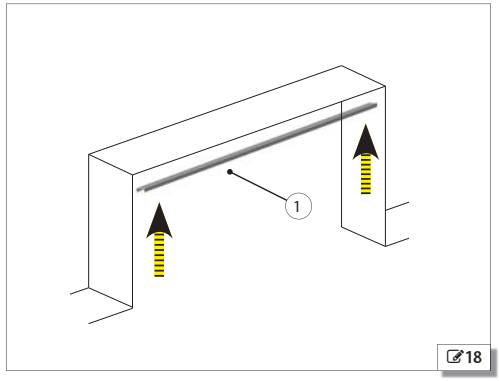

18

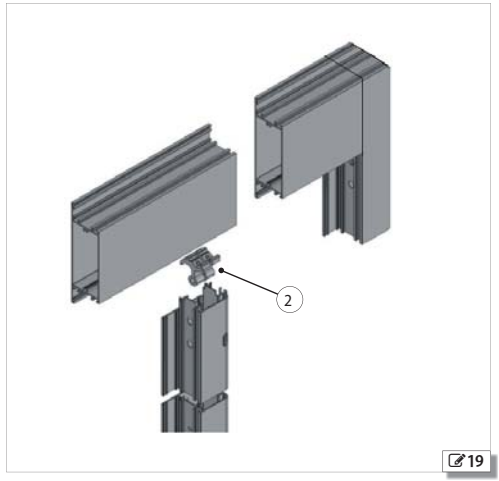

19

If the balancing profile needs to be cut, pay attention to the alignment of the holes, which have a variable spacing. It is recommended to make the reference marks for the cut starting from the top.

FASTENING THE FIXED LEAVES

Fixed leaves may be:

- with low skirting
- with high skirting

Fasten the fixed leaf to the floor by drilling the leaf **21**-③ and fasten it using suitable screws and dowels.

- Use adequate wall bits and dowels with screws.

Ensure there are no hydraulic coils or electrical conduits under the floor at the planned drill points.

MOUNTING MOBILE LEAVES

Mount the leaves as described in § 9 **31**.

GLAZING INSTALLATION

1. Place the 3 shims in the lower part of the profile **21**-②.
2. Place the glazing on the shims. **22**- ③④

Handle the glazing adhering to the safety warnings in the Safety chapter.

3. Secure the glass using the beading supplied **22**-⑤.
4. Insert the beading along the entire length of the perimeter.

The seal must be inserted with the spline side towards the inside of the profile **22**-①.

ASSEMBLY OF THE HEAD SECTION TO THE UPPER PROFILE

Mount the assembled head section onto the upper profile by means of suitable attachments.
After mounting the head section, perform all procedures to secure the leaf to the carriages as set out in the chapters concerning kit assembly.
Refer to chapter § 8 also for all the adjustment procedures.

7.2 ENTRY DOOR WITH TK20 PROFILES

PRELIMINARY OPERATIONS

1. Check soundness of the installation opening (Masonry, Structural Metal Work, etc.).
2. Take the measurements of the opening.

The frame must be fastened to the structure with suitable attachments.

Ensure there are no hydraulic coils or electrical conduits under the floor at the planned drill points.

3. Measure the door frame and compare them with the opening measurements.
4. Check floor levelness with a spirit level.

ASSEMBLING THE FRAME

The supply includes:

- 4 leaves (2 fixed leaves and 2 mobile leaves with installed glazing).
- side and upper balancing profiles
- alignment profile
- fixed leaf beading
- floor shoe

1. Install the upper balancing profile **23**-①.
2. Install the side balancing profiles **23**-②.
3. Mount the floor profile **23**-③.
4. Insert the fixed leaf by tilting it and inserting it into the top profile **24** ① ② ③.
5. Place horizontally then fasten the leaf.
6. Mount the upper labyrinth profile **24**-⑤.

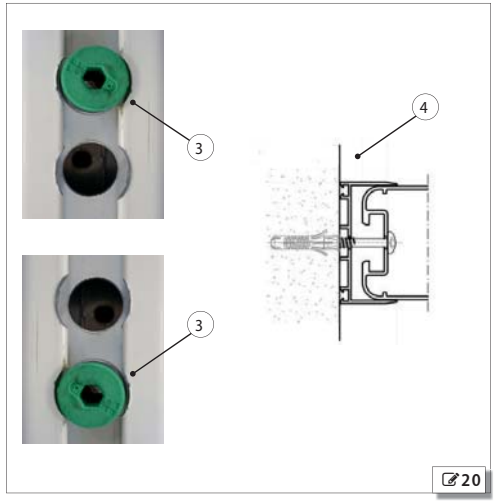

20

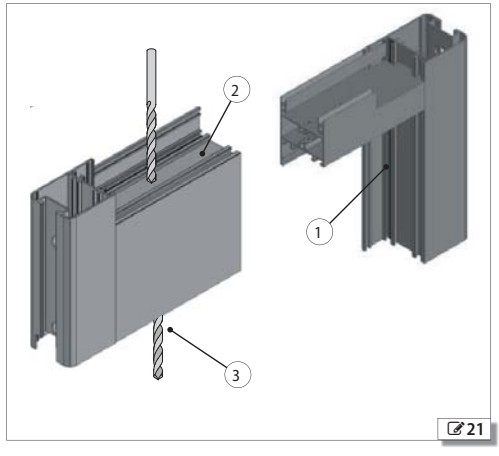

21

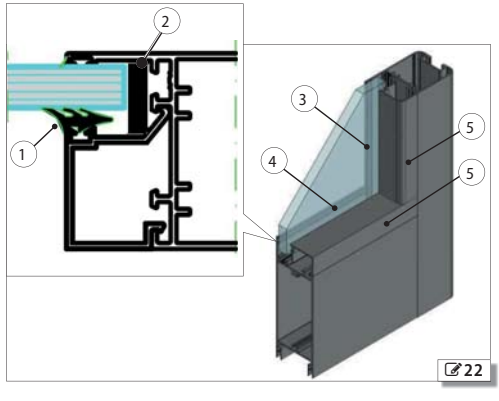

22

MOUNTING MOBILE LEAVES

Mount the leaves as described in § 9 **31**.

ASSEMBLY OF THE HEAD SECTION TO THE UPPER PROFILE

Mount the assembled head section onto the upper profile by means of suitable attachments.
After mounting the head section, perform all procedures to secure the leaf to the carriages as set out in the chapters concerning kit assembly.
For all the adjustment procedures, also refer to chapter § 8 **28**.

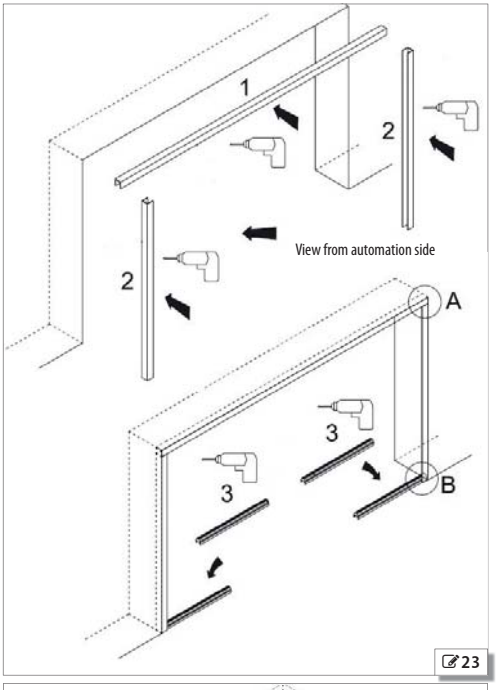

23

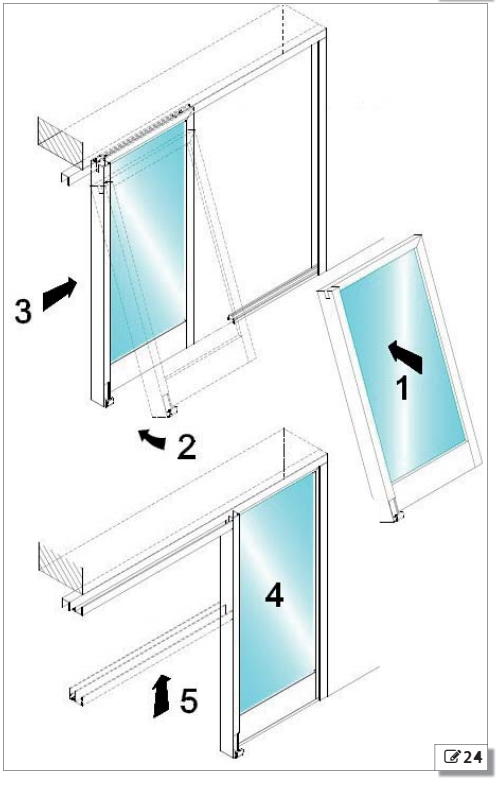

24

8. INSTALLING THE HEAD SECTION

RISKS

PERSONAL PROTECTIVE EQUIPMENT

REQUIRED TOOLS

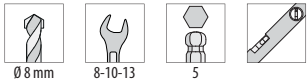

For manual lifting, there should be 1 person for every 20 kg to be lifted.

8.1 PRELIMINARY OPERATIONS

1. To be able to perform fastenings, the casing and electronics module must be temporarily disassembled and the components must be moved as they are a hindrance.

To make subsequent replacing easier, mark components' positions.

- With the automation on the ground, extract the safety cables and remove the casing.
- Loosen the screws of the electronics module and remove it.
- Loosen the screws of the components that are a hindrance (e.g. motors) and slide them along the profile.

2. Establish the fastening height of the support profile:
   - for leaves with a standard 2.5 m high frame, consider overall dimensions of ✎**72** to ✎**75**

The minimum distance between the top of the support profile and the ceiling must be 80 mm ✎**25**.

Check the horizontal with a spirit level.

3. Continue according to the intended type of installation:
   - FASTENING TO THE WALL **28**
   - SELF-SUPPORTING FASTENING with OPTIONAL **29** accessory profile - if provided for specific requirements.

8.2 WALL FASTENING

The supporting wall must be adequate for the weight of the entry door (automation with leaves). It is recommended to use dowels with adequate screws and tightening torque.

1. Lift the support profile to the established fastening height.
2. Mark the drilling points on the wall.

Check the horizontal with a spirit level.

3. Drill the holes on the wall.
   - Use suitable drill bits for the wall material.
4. Lift the support profile. Start fastening at a vertical slot at one end and a horizontal slot at the other end.

Check the horizontal with a spirit level.

5. First fasten it in the centre and then fasten it at the other points, alternating vertical and horizontal slots at a distance of 200 mm ✎**25**.

Upon completing head section installation, reposition the components you have moved and reassemble the electronics module in the correct position.

Finally, fit again the safety cables and the casing.

Screws and dowels not supplied.

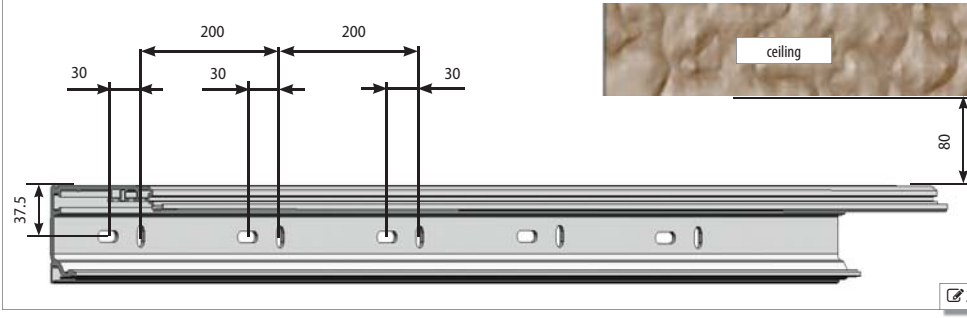

✎**25**

8.3 MOUNTING THE SELF-SUPPORTING AUTOMATION

(IF PROVIDED)

The side supporting walls must be adequate for the weight of the entry door (automation with leaves). It is recommended to use dowels with adequate screws and tightening torque.

In the self-supporting version of the automation system (if supplied), the support profile is mounted on the self-supporting profile and the side brackets **19**.

1. Lift the automation to the established fastening height and mark on the wall the drilling points at the 4 slots of each side bracket.

Check the horizontal with a spirit level.

2. Drill the holes on the side walls.
   - Use drill bits that are suitable for the material **26**.
3. Lift the automation and fasten it to the side walls:
   - Use 4 suitable wall plugs in correspondence with the 4 slots on each of the two side brackets **27**.

Check the horizontal with a spirit level.

4. If the length of the profile exceeds 3000 mm, tie rods must be fitted to the wall or ceiling, depending on the situation, in intermediate position to prevent bending of the head section's middle.

Use steel tie rods suitable for supporting a 600 kg load (the contact surface of the cable with the self-supporting profile must be at least 70 mm^2)* **28**.

5. The number of tie rods required depends on the length of the profile:
   - from 3000 to 4000 mm, a central fastening is required.
   - from 4000 to 6100 mm, two intermediate fastening points are required.

It is nevertheless recommended to fit a tie rod in a central position also for lengths less than 3000 mm.

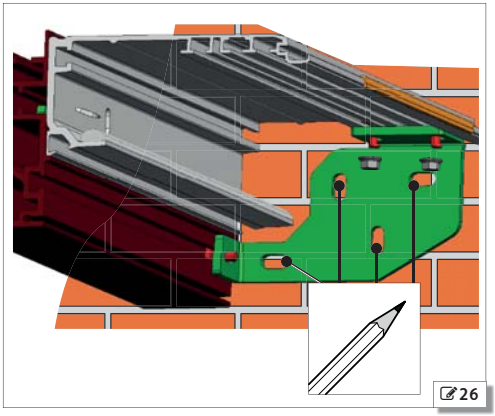

26

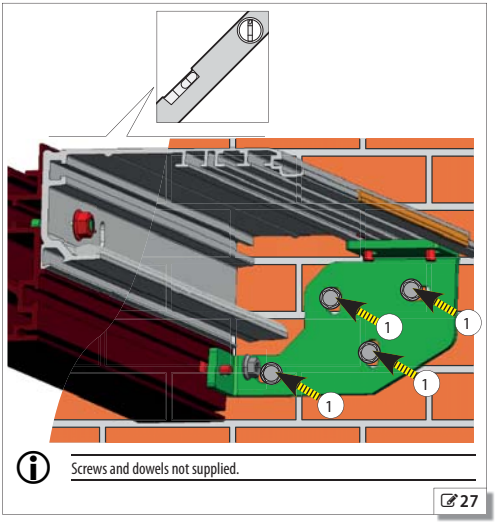

Screws and dowels not supplied.

27

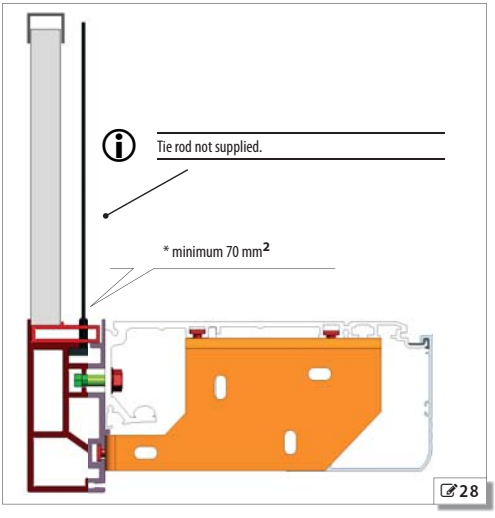

28

8.4 MOUNT THE TRANSOM

(OPTIONAL)

The optional transom is provided in the event of self-supporting head section.

1. Insert the transom panel into the slot on the self-supporting profile ✎29.
2. Keep the panel raised in order to insert the profiles at a regular distance ✎30.
3. Lower the panel onto the profiles ✎31.
4. Install a tie rod (not provided) in the centre ✎32.

Use steel tie rods suitable for supporting a 600 kg load (the contact surface of the cable with the self-supporting profile must be at least 70 mm²)* ✎28.

The number of tie rods required depends on the length of the profile: install one tie rod every 2500 mm.

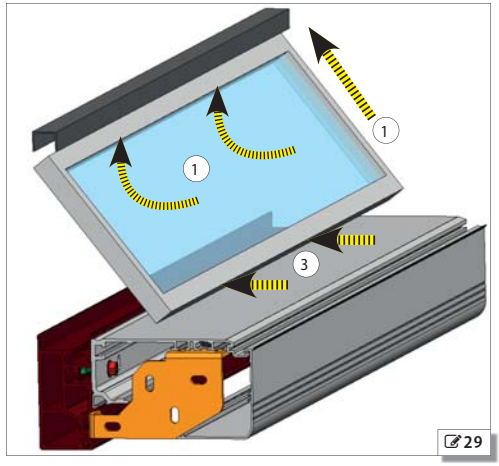

✎29

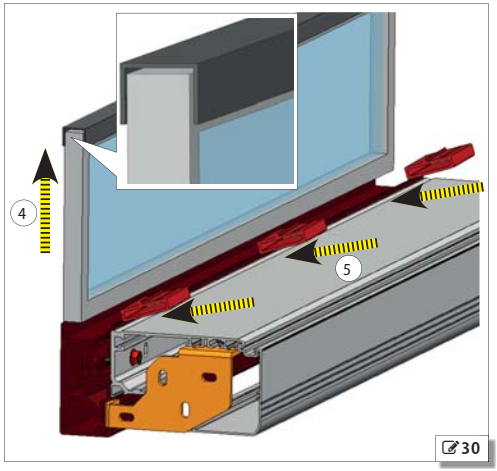

✎30

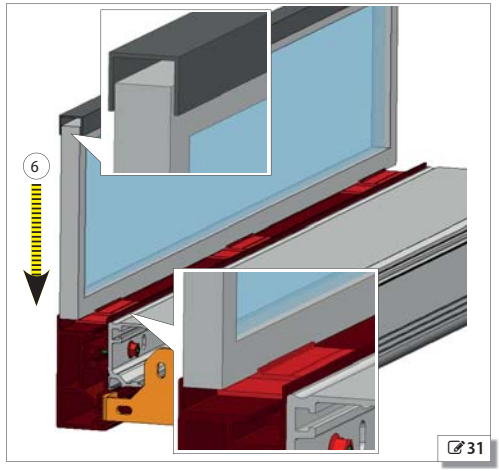

✎31

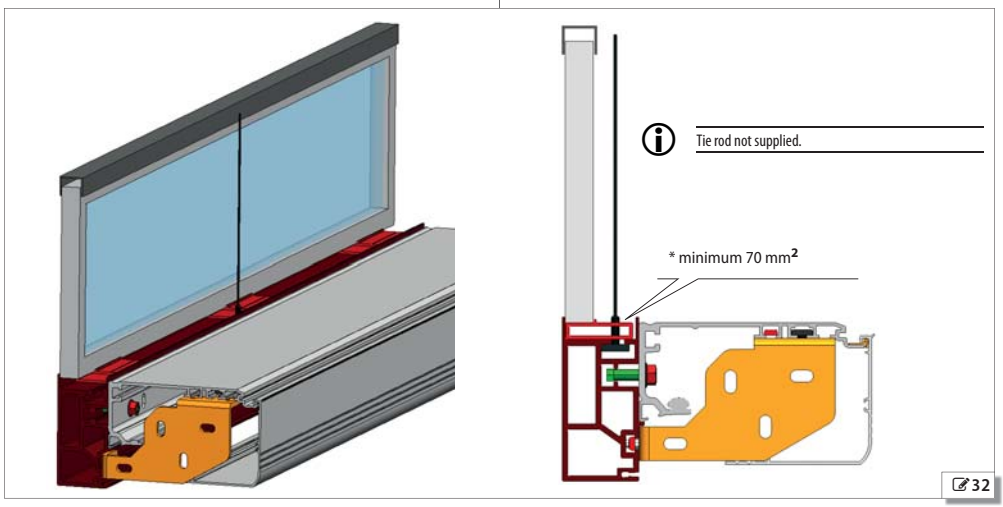

✎32

9. INSTALLING THE LEAVES

RISKS

PERSONAL PROTECTIVE EQUIPMENT

REQUIRED TOOLS

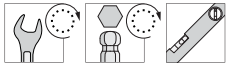

For manual lifting, there should be 1 person for every 20 kg to be lifted.

9.1 MOUNTING THE LOWER SHOES

SHOE WITH BRACKET TK50

For fastening to the wall or the fixed leaf ✎**33**.

- use suitable screws (not provided).

SWIVEL SHOE TK50

For fastening to the floor ✎**34**.

- use suitable screws (not provided).

SHOE WITH BRACKET TK20

For fastening to the fixed leaf ✎**35**.

- use suitable screws (not provided).

Check leaf verticality.

When the leaf is open or closed, the shoe must be fully inside the lower leaf profile.

The distance between the shoe and the lower profile must be 4mm (ref. 4 ✎**33**-✎**34**-✎**35**).

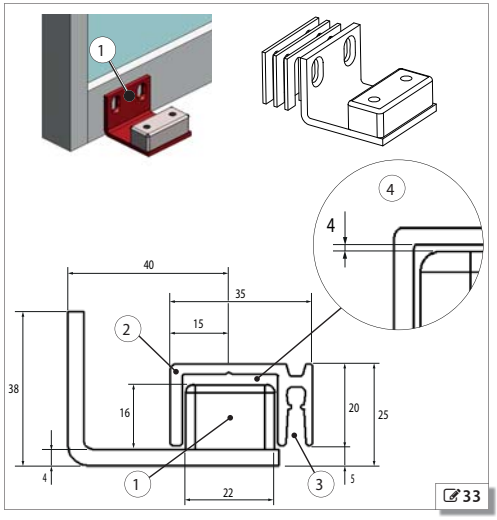

✎**33**

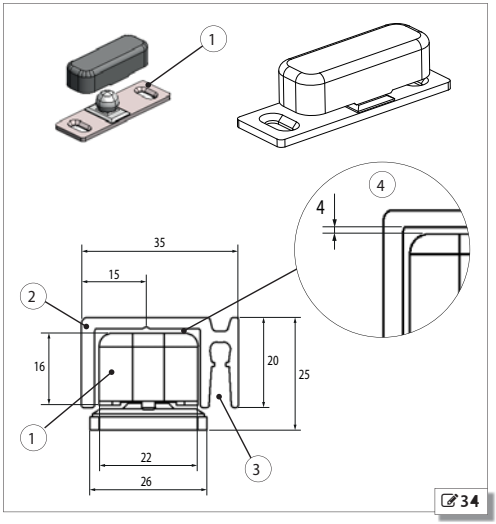

✎**34**

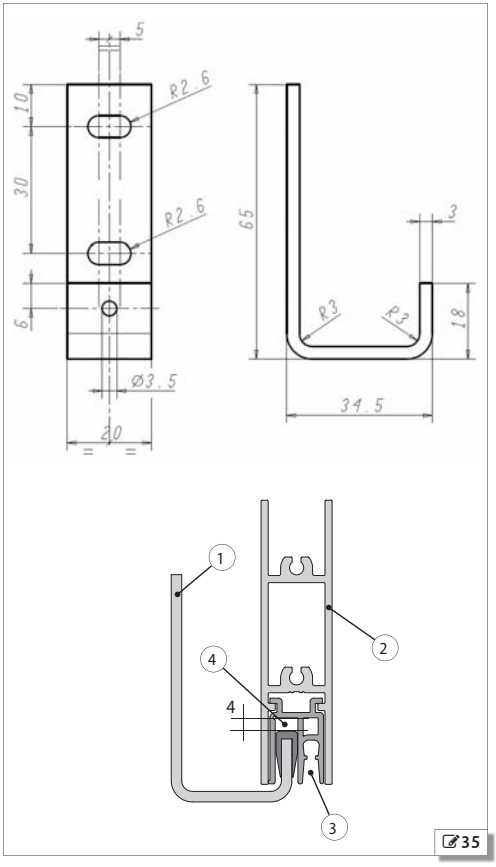

✎**35**

ENGLISH

Translation of the original instructions

9.2 MOUNT PROFILES ON THE LEAVES

Before installing the leaves, ensure there is no cutting or dragging hazard.

Check leaf verticality.

Remove any protrusions and/or sharp edges on the frame and leaves.

1. Position and fasten the attachment profile onto the top of the leaf **36**.

Use suitable screws for the weight of the leaf with adequate tightening torque.

2. Position and fasten the lower guide profile onto the bottom of the leaf **37**.

9.3 MOUNT THE LOWER SWEEPER

(OPTIONAL ACCESSORY)

1. Cut the sweeper to the same length as the leaf.
2. Insert the brush into the appropriate housing in the lower guide profile **37**-①.

GLASS LEAVES

For installation of glass leaves see the dedicated section: § 10 **39**.

9.4 INSTALLING THE LEAVES

Install each leaf as described below.

- Keep to the dimensions indicated in diagrams **72** to **76** and:
- **76** - **59** for RIGHT single leaf automations
- **77**- **60** for LEFT single leaf automations
- **78** - **62** for DOUBLE leaf automations

For manual lifting, there should be 1 person for every 20 kg to be lifted.

Adjust the counter wheel **51** **38**.

Screws not supplied.

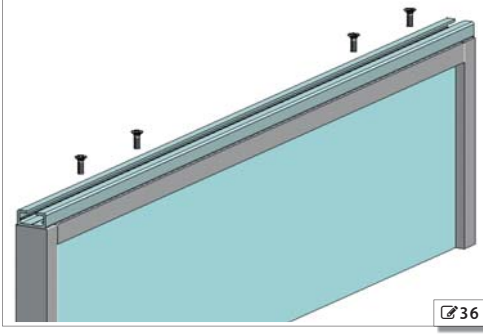

36

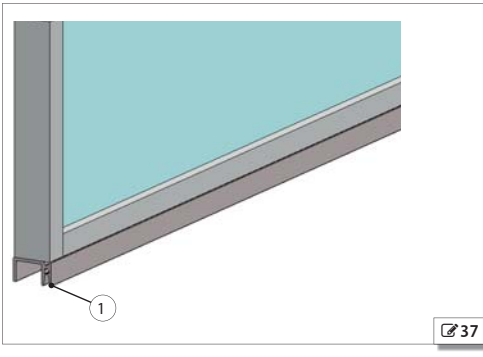

37

9.5 PREPARING THE EXTERNAL CARRIAGES

Assemble the wheels for the steel cable on the external carriages.

1. The wheel ✎**38**-① is fastened by putting the screw into the threaded hole of the carriage.
2. The second wheel is fixed to the long carriage via the slot and the tensioning plate using the screw and nut ✎**38**-②.

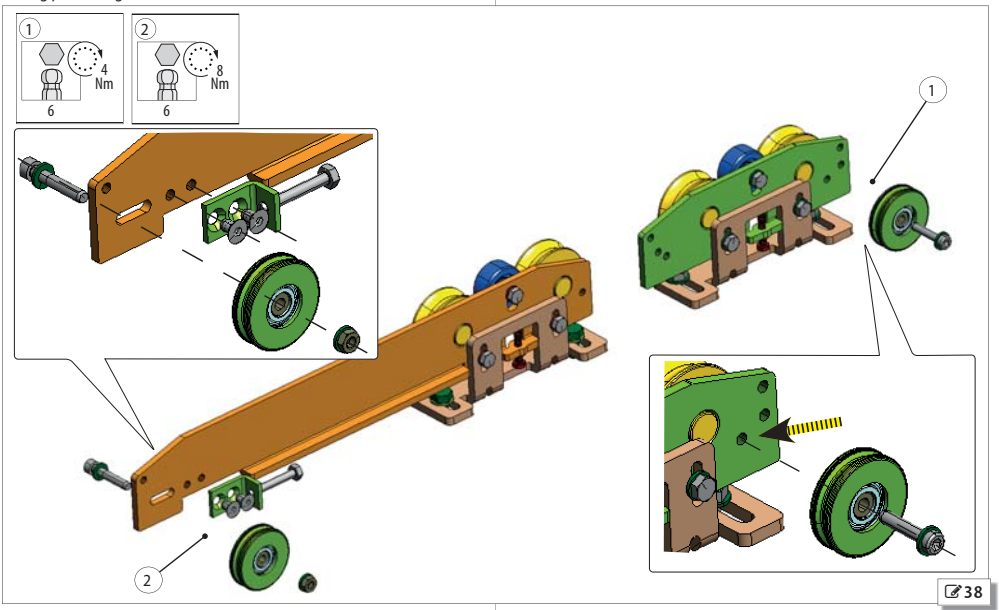

✎**38**

3. After mounting the steel cable on the 2 wheels ✎**39**-①, the two lengths of steel cable must be placed under the plates as shown in ✎**39**-② and locked in position using the 4 screws supplied. The plates must be positioned in the top part of the carriage unit, as shown in ✎**39**-②.
4. Close the 2 ends of the steel cable using cable lugs ✎**39**.
5. Adjust steel cable tension with the slot so that the two branches are parallel.
6. Then fix it in position using the screw that rests on the wheel shaft ✎**39**-②.

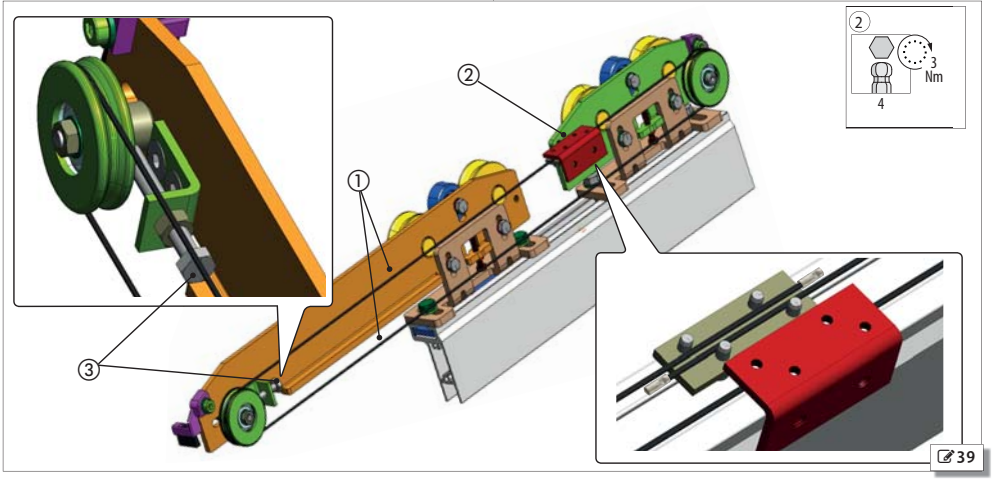

✎**39**

then insert the external carriage units from the side 40 .

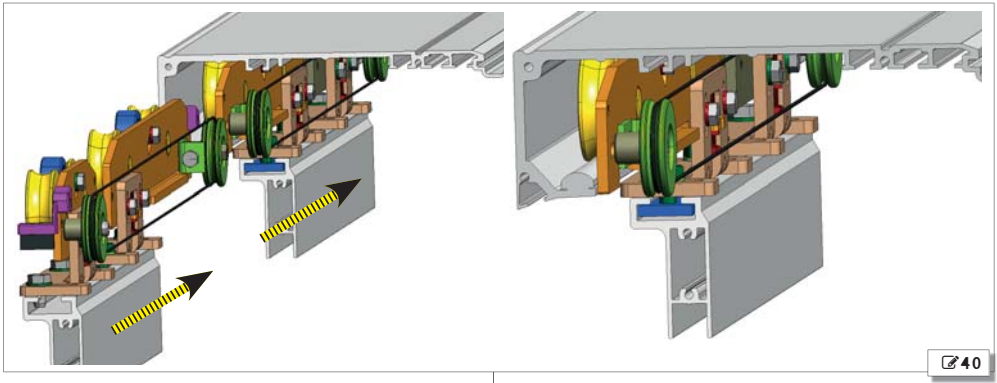

40

9.6 TELESCOPIC PROFILE ASSEMBLY

Three 2-metre rods are used to assemble the telescopic profile, which will be aligned and cut to measure matching the head section length Lt.

1. Insert the 3 rods in the profile from the 200mm side 41-① . The end part will be 50mm 41-② .
2. Then position the rods properly, bring the telescopic profile against the main profile and fasten it with the hex screws with washer 41-③ .

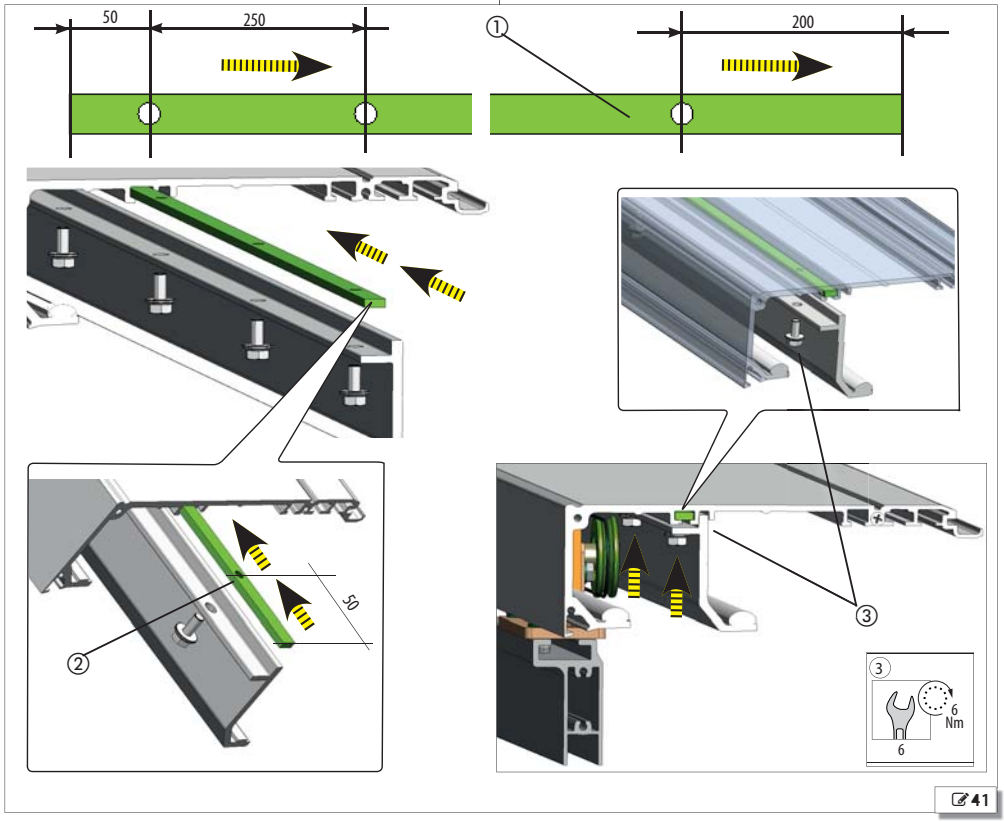

41

9.7 PLATE ON TELESCOPIC PROFILE

1. Open the external leaves completely until they come in contact with the external mechanical stops **42**-①.
2. Refer to tables A or B for a single right or left leaf **78** or double leaf **80**, to drill the 5 mm diameter holes on the outside of the telescopic profile, as indicated in **42**-② to secure the plate of the steel cable .
3. Use the reference line on the telescopic profile and relevant adhesive template to keep the 2 holes of the plate aligned **42**-②.
4. Then fix the plates with the screws provided **42**-③

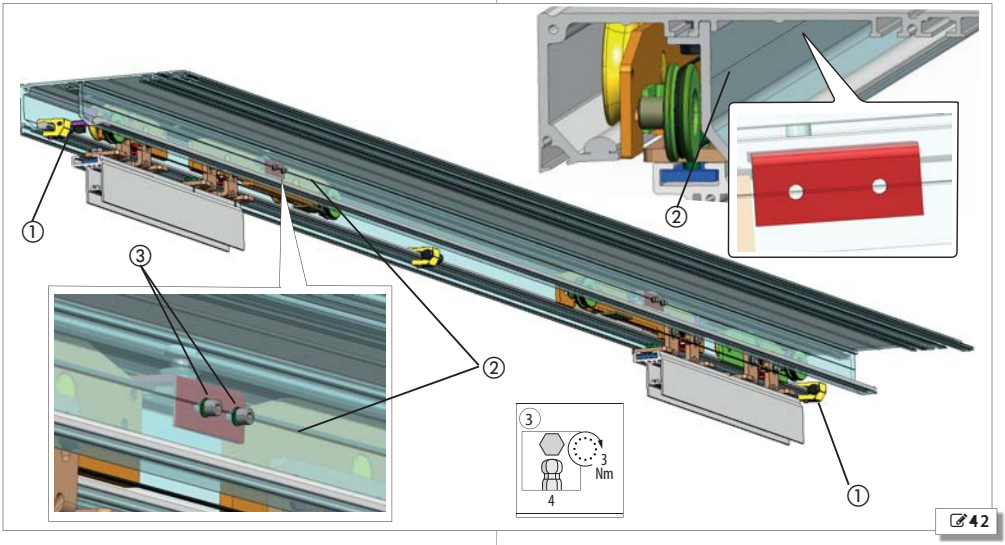

42

9.8 PREPARING EXTERNAL CARRIAGES

1. Assemble the supports and bracket **43**-①②.
2. Install the belt connection unit **43**-③.

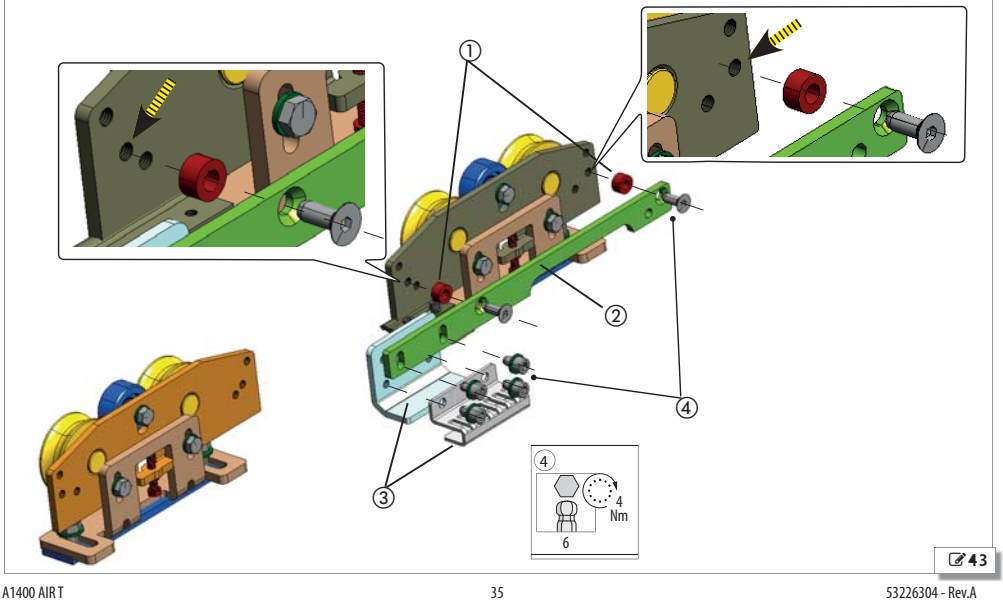

43

3. Assemble the carriages on the leaf support **44**-①②.
4. Fit the bracket for securing the steel cable of the external carriages **44**-③

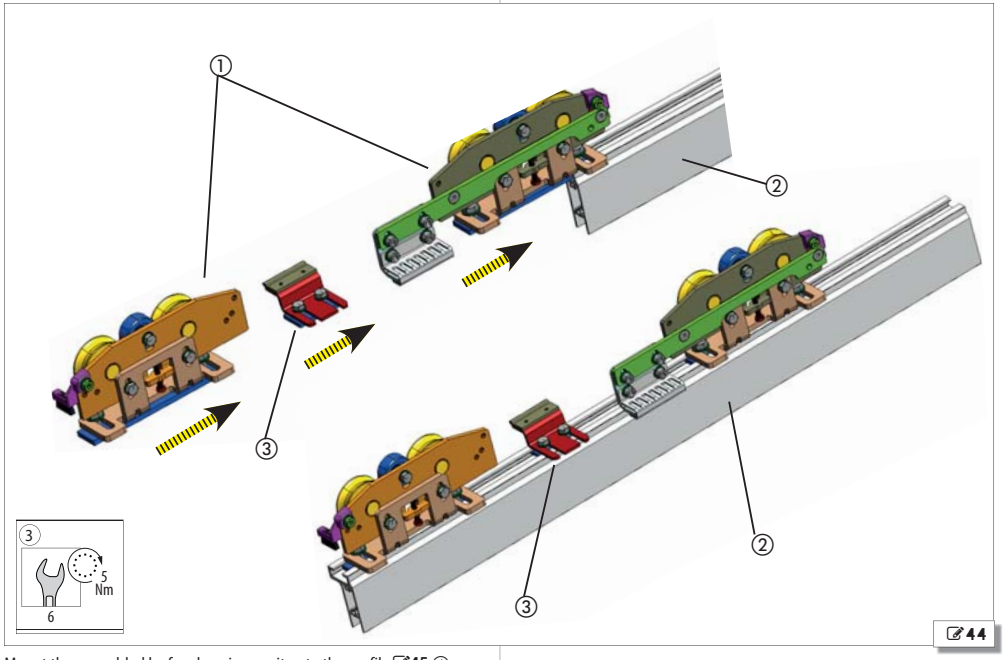

44

Mount the assembled leaf and carriage unit onto the profile **45**-④ .

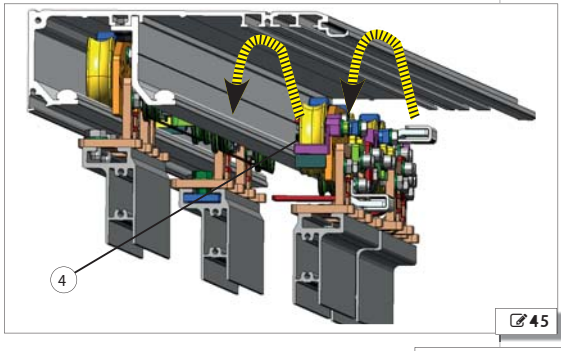

45

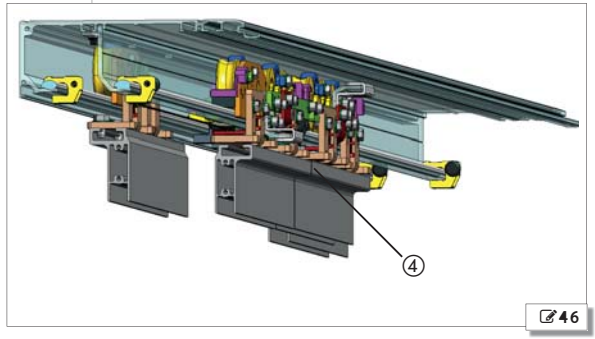

46

9.9 STEEL CABLE FIXING

1. Close the internal leaves of the door 47-①.
2. Make sure that there is a 25mm overlap between the external and internal leaves 47-①.
3. In this condition, use the brackets to lock the steel cable of the external carriages 47-③.
4. Secure the cable under the brackets using the screws provided 47-③.

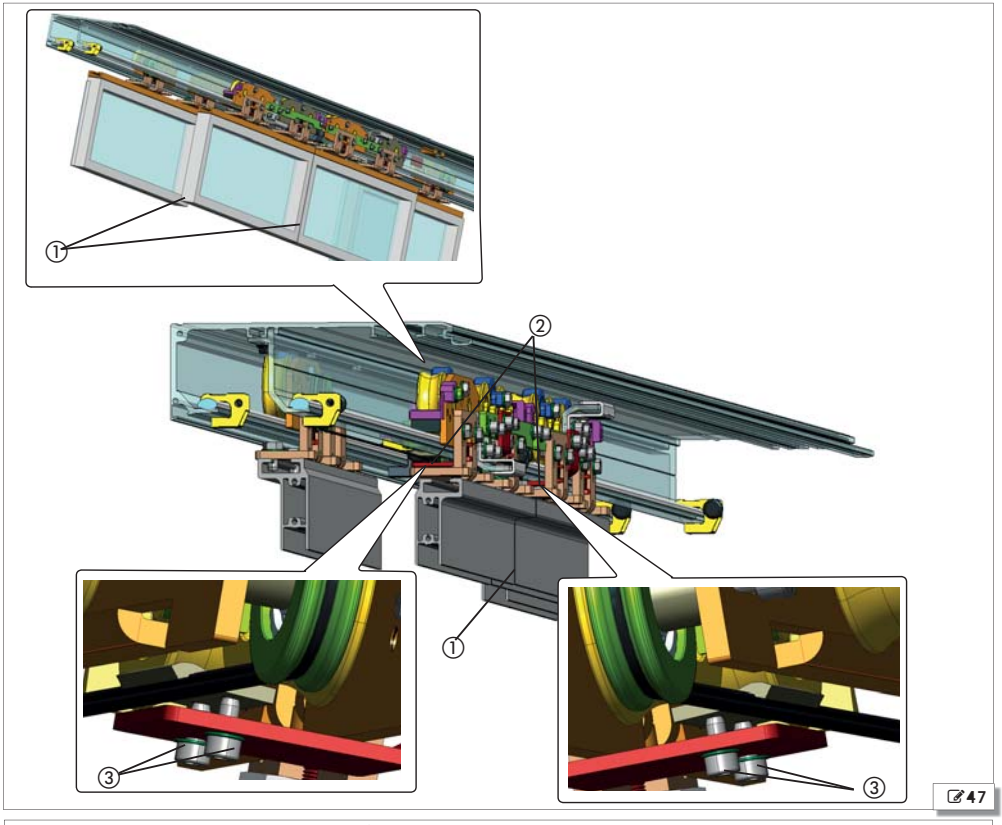

47

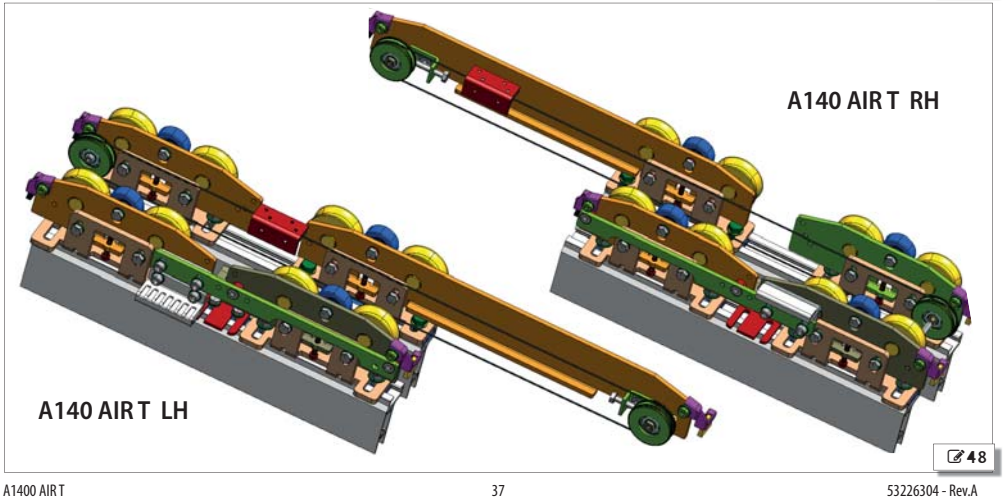

48

9.10 ADJUSTING THE LEAVES AND CARRIAGES

Act on the carriages to adjust height and depth of the leaves.
Adjust the counter wheel to prevent the carriage coming off the sliding guide.

HEIGHT OF THE LEAVES

The carriages allow leaf height to be adjusted by ± 7.5 mm.

1. Slightly loosen the two screws ✎**49**-①.
2. To lift the leaf, turn the screw ② clockwise. To lower the leaf, turn screw ② anti-clockwise.
3. Tighten the two screws ✎**49**-①.

DEPTH OF THE LEAVES

1. Loosen the 2 screws ✎**50**-①.
2. Move the leaf on the two slots at the base of the carriages as desired.
3. Tighten the 2 screws ✎**50**-①.

After the adjustments check the vertical and horizontal positions of the leaf with a spirit level.

COUNTER WHEEL

1. Loosen the screw ✎**51**-①.
2. Adjust the height by sliding the wheel support in the diagonal slot ✎**51**-②.
   - The wheel must be brought close to the top profile ✎**51**-③. It is recommended to place a 0.5 mm shim between wheel and profile. Remove the shim upon completing adjustment.
3. Tighten the screw ✎**51**-①.

Manually move the leaves to ensure the counter wheel runs freely along the entire stroke. Ensure there are no friction points with the surface of the support profile.

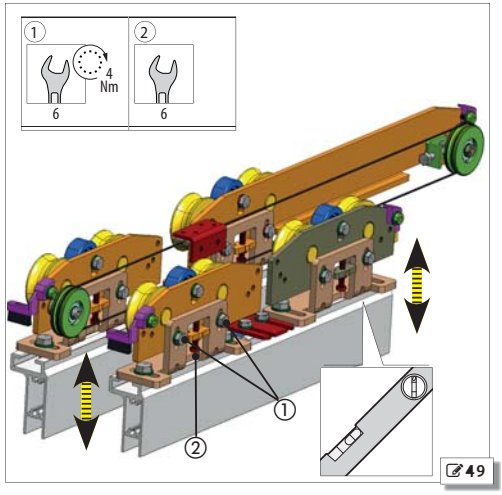

✎**49**

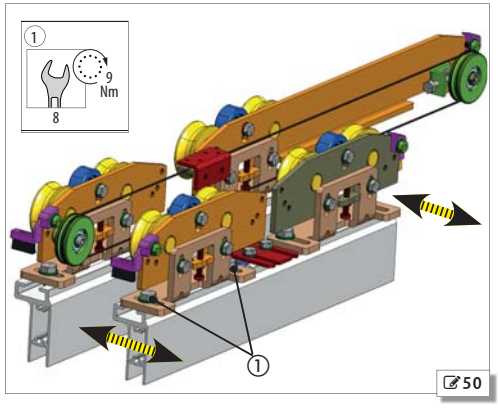

✎**50**

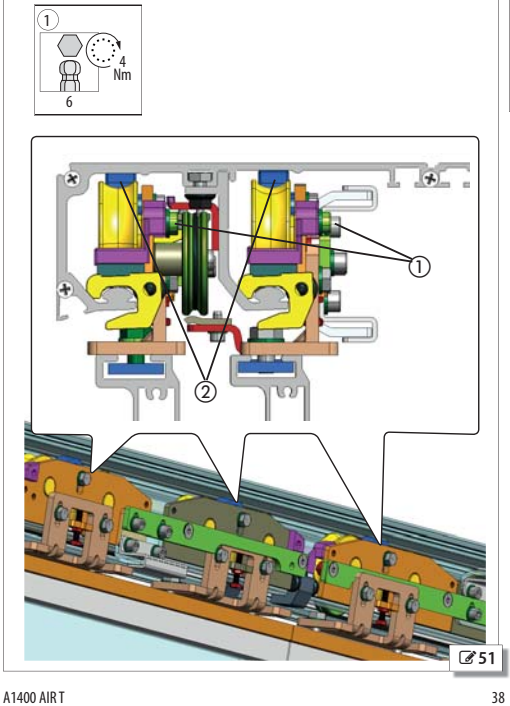

✎**51**

10. INSTALLING THE GLASS LEAVES

RISKS

PERSONAL PROTECTIVE EQUIPMENT

REQUIRED TOOLS

For manual lifting, there should be 1 person for every 20 kg to be lifted.

Comply with the glass thickness = 10-11 mm.

1. The glass must be drilled as shown 52-①.
2. Insert a bush in each hole in the glass 52-②.
3. Make 2 holes on the profiles of the gripper 52-③-④.
4. Cut 2 pieces of glass beading with the length equal to L.
5. Drill holes in the seals in correspondence to the holes in the glass 52-⑤
6. Insert the 2 seals into the profiles 52-⑥.
7. Clean the glass, insert the gripper.

Ensure the beading is in its housing.

8. Assemble the gripper as follows: Insert elements ⑩ and ⑪ into the 2 plates ⑨.
9. Tighten the 2 grub screws 52-⑦
10. Part ⑪ must be aligned with the fixing holes on the carriage 53-③
11. Insert 2 galvanised countersunk head screws into the holes 52-⑧.

The glass must be fully inserted until it touches the clamps on its upper profile. If the grip of the clamp on the glass is not correct, the glass might fall. The two clamp profiles must be aligned.

Adjust the position of the two plates on the leaf.

- Keep to the measurements indicated in diagrams 72 or 73 and:
- 76 - 59 for RIGHT single leaf automations
- 77 - 60 for LEFT single leaf automations
- 78 - 62 for DOUBLE leaf automations

For manual lifting, there should be 1 person for every 20 kg to be lifted.

Adjust the counter wheel 51 38.

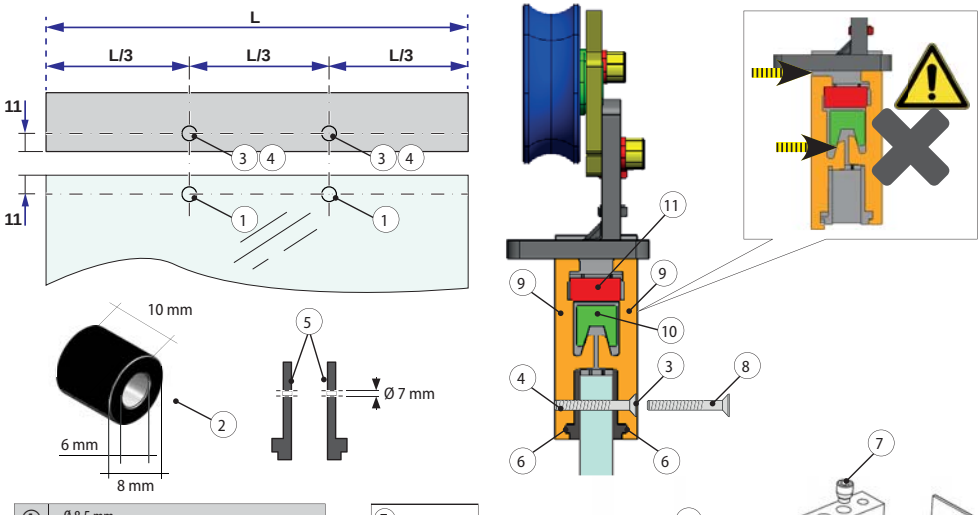

①	Ø 8.5 mm
②	bush Ø internal 6 mm Ø external 8 mm
③	Ø 6.5 mm with 45° flaring
④	Ø 5.0 mm with M6 tapping
⑤	Ø 7.0 mm
⑦	2 x M8
⑧	2 x M6 x 25 UNI 5933

52

ENGLISH

Translation of the original instructions

Use suitable glazing suction cups.

12. Insert the end covers ✎**53**-⑧.

Check leaf verticality.

When the leaf is open or closed, the shoe must be fully inside the lower leaf profile.

The distance between glass and lower shoe must be 4mm ✎**53**-⑨.

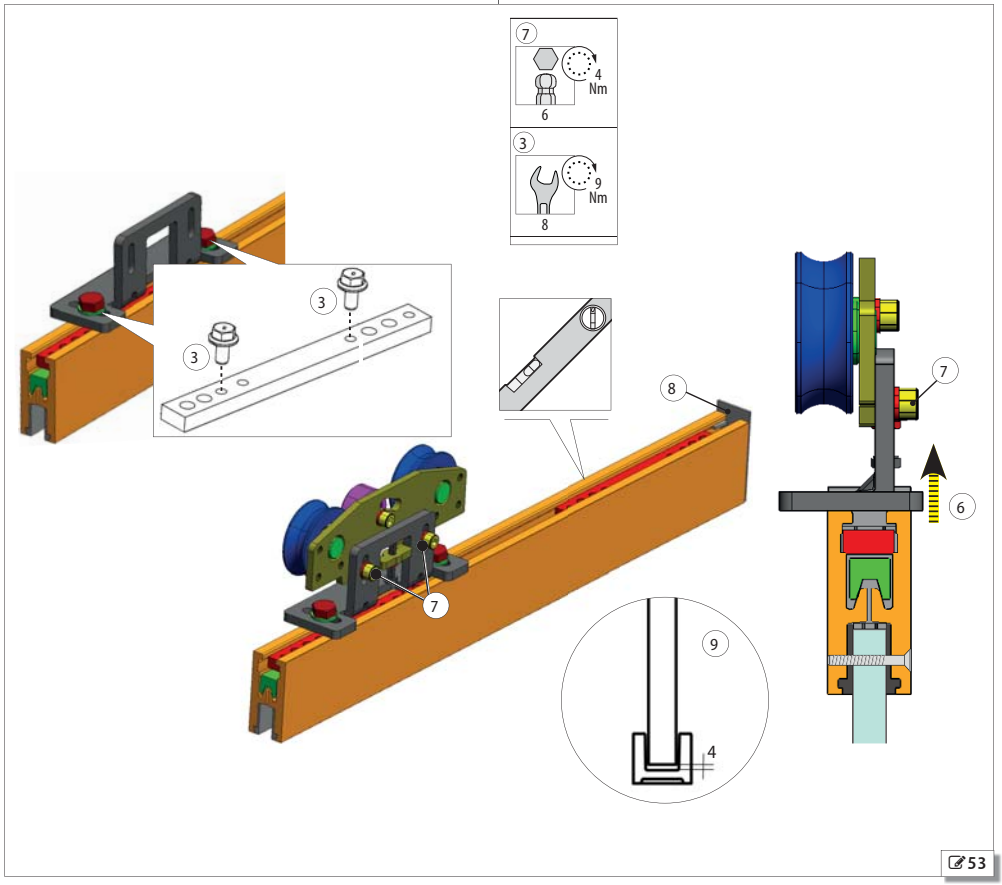

✎**53**

10.1 MOUNTING THE SWEEPERS

For double leaf automations: 54.
For single leaf automations: 54.

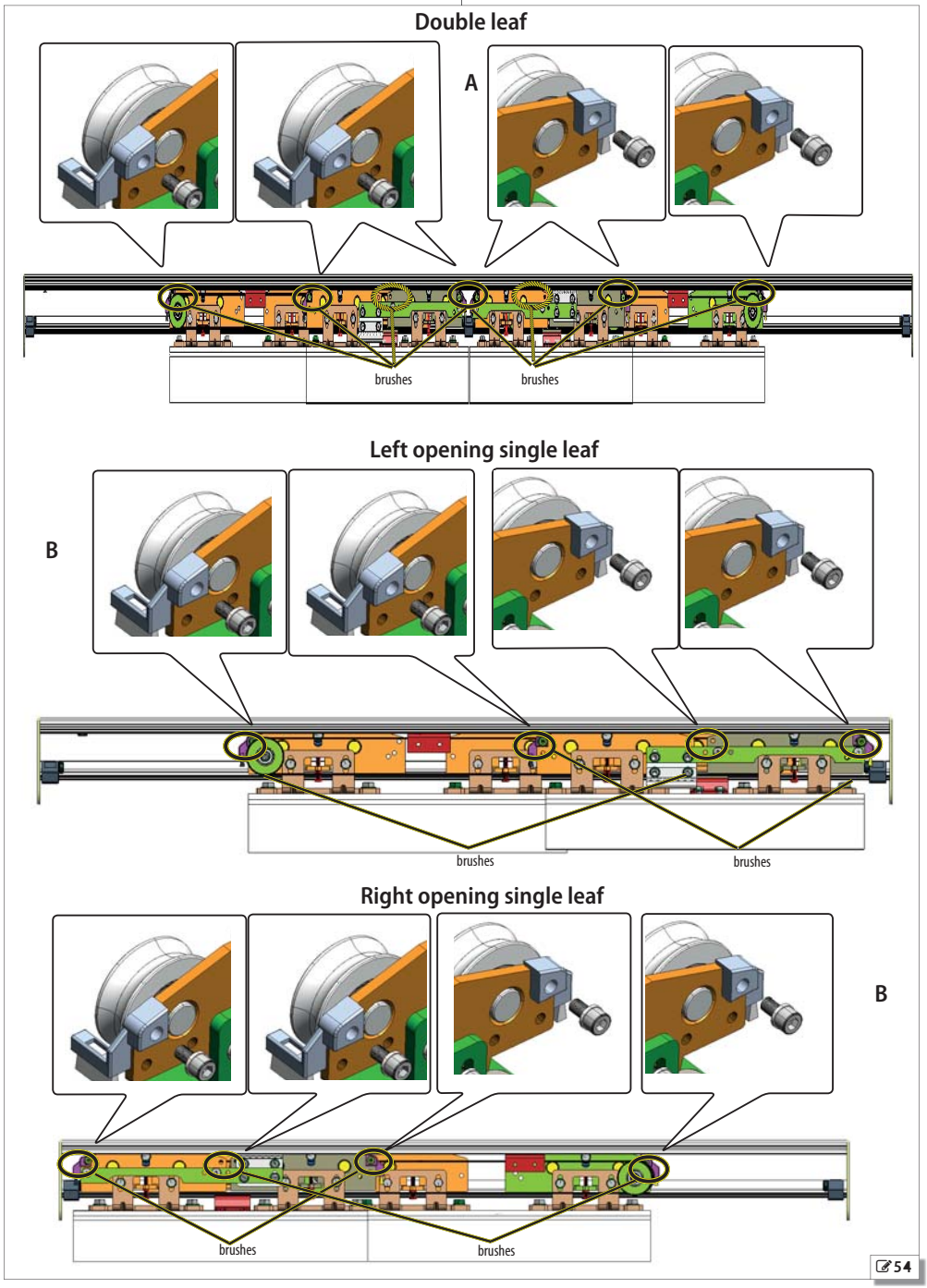

54

11. ASSEMBLE THE BELT, CASING AND ACCESSORIES

RISKS

PERSONAL PROTECTIVE EQUIPMENT

REQUIRED TOOLS

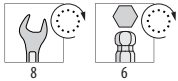

Do not place hands between: the pulley and belt or between the sliding guide and carriage wheels.

11.1 MOUNTING THE BELT

close the leaves at the centre line (closing point in case of single leaf)
Move the leaves by hand and ensure the movement is smooth and friction-less along the stroke.

It is mandatory to use a FAAC belt for the A1400 AIR T

1. Place one end of the belt over the pulley of Motor_1. Fasten the two ends using the fittings ✎**55**(1) and screws ✎**55**(2).

The middle slot of the belt fitting must be left empty ✎**55**-④.

2. Position the assembled fitting with the belt on the carriage. Keep to the positions indicated in ✎**55** and fasten using the screws ✎**55**-③.

In case of double leaf, the belt joint must be fastened on the lower fitting (on the left leaf).

The position of the belt fitting determines the opening direction.

3. Position the belt also on the pulley of the second motor.

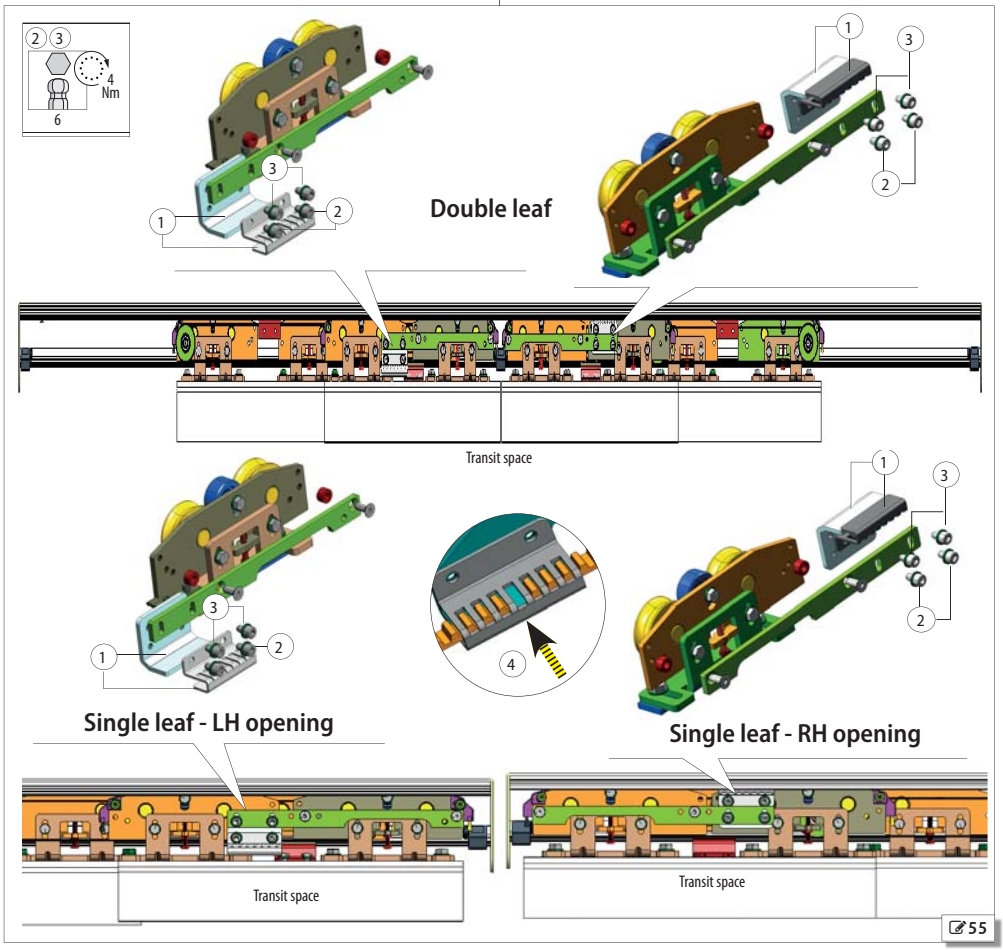

ADJUSTING THE BELT

Open and close manually a few times: the belt must remain in its seat flush with the pulley.

When the belt is installed, operate the leaves with care to prevent crushing your fingers between the carriage wheels and the sliding guide and between the pulley and belt.

SINGLE LEAF WITH LH OPENING / DOUBLE LEAF

1. Connect the belt fitting to the carriage.
2. Attach a 1kg weight in the centre of the upper section of the belt.
3. Adjust the tension of the belt until the measurement of arrow f corresponds to the indications in ▦ **9**.
4. In the case of a double leaf: after adjustment, mount the second upper belt fitting and connect it to the carriage.

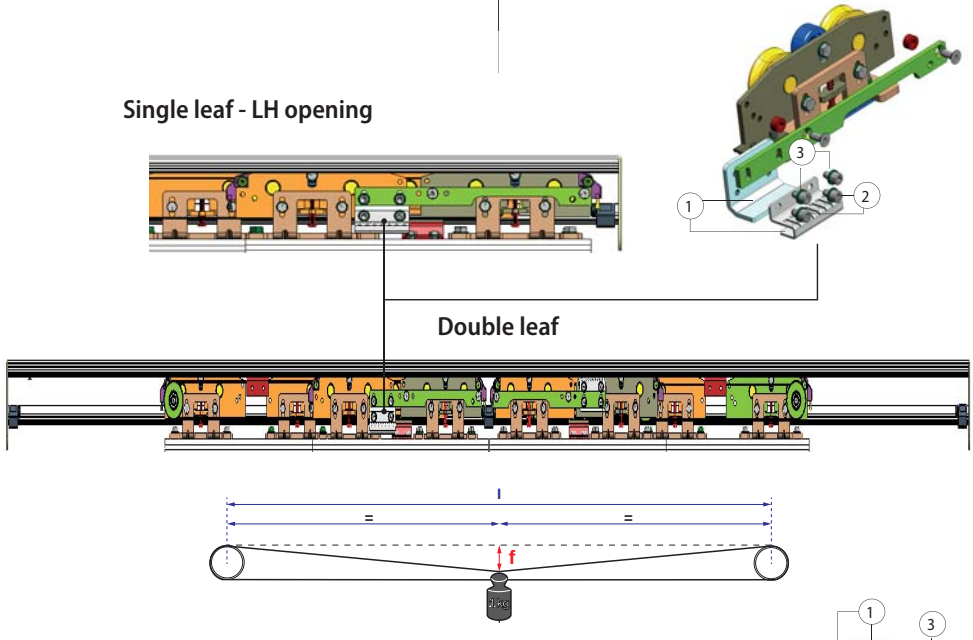

SINGLE LEAF WITH RH OPENING

1. Connect the belt fitting to the carriage.
2. Apply a 1 kg weight in the centre of the belts lower section.
3. Adjust the tension of the belt until the measurement of arrow **f** corresponds to the indications in ▦ **9**.

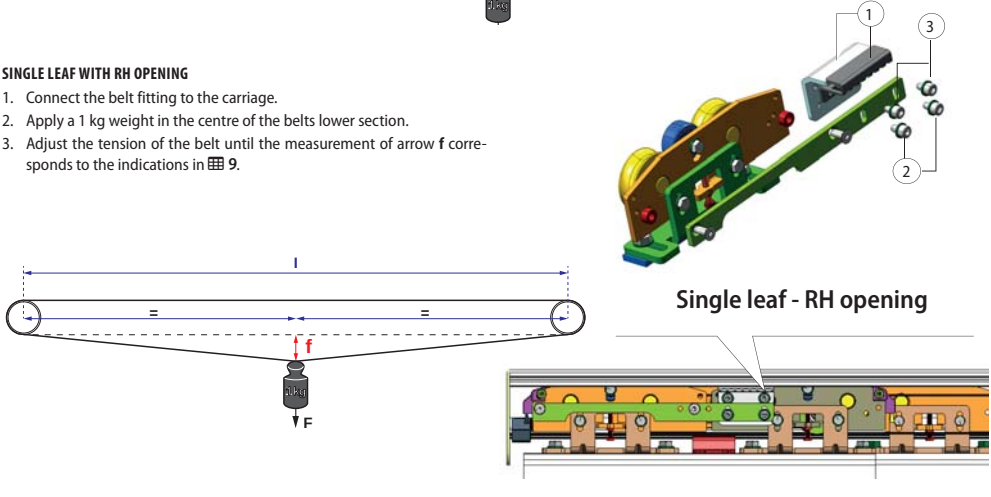

11.2 BELT TENSIONING

1. To tension the belt correctly, proceed as follows.
2. Loosen the nut 56 -①.
3. Adjust the screw and nut 56-② to tension or slacken the belt.
4. Attach a **1 kg** weight in the centre of the lower section of the belt.
5. Measure the arrow **f** and adjust the screw 56 -② using a hex spanner until obtaining the measurement specified in the table.
6. After adjustment, tighten the screw 56-①.
7. Carry out a few cycles and make sure the belt remains in its seat flush with the pulley on the main motor and on the return pulley.

Caution - make sure that the belt remains flush with the pulleys on the main motor and the return pulley.

8. If the belt is not flush with the pulleys, loosen the fastening screws of the return pulley bracket 56 -③
9. Rotate the return pulley bracket clockwise.
10. Tighten the return pulley bracket fastening screws.
11. Perform a few cycles again and check that the belt remains flush with the pulley.

Close the door and ensure:

- the closing point between the two leaves matches with the centre line of the support profile.

- complete opening and closing is possible.

In case of deviation, check the position and correct connection of the belt fittings.

When the belt is new tensioning adjustment must be repeated after the first 100 cycles.

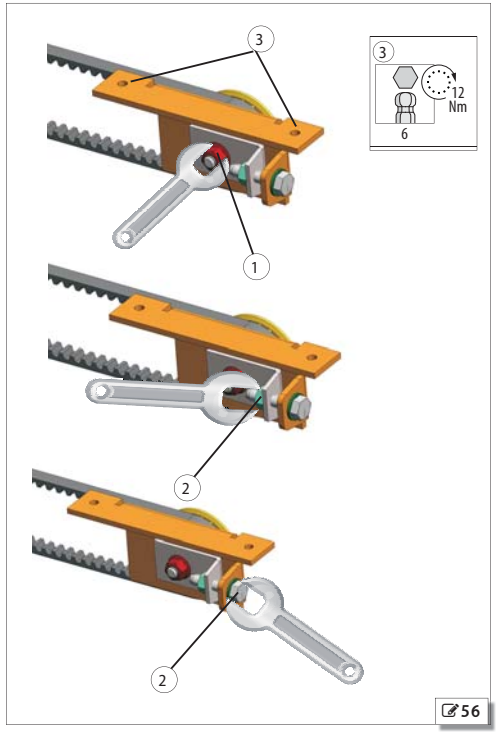

9 Belt tensioning (measurements in mm)

RH single leaf		
Pulley centre distance (I)	Belt length	f
1255	2690	20
1355	2890	21
1455	3090	23
1555	3290	24
1655	3490	26
1755	3690	27
1855	3890	29
1955	4090	30
2055	4290	32
2155	4490	34
2405	4990	38
2655	5490	41
2905	5990	45
3155	6490	49
3405	6990	53

LH single leaf		
Centre distance pulleys (I)	**Length belt**	**f**
1280	2740	20
1415	3010	22
1550	3280	24
1685	3550	26
1820	3820	28
1955	4090	30
2090	4360	33
2225	4630	35
2360	4900	37
2495	5170	39
2630	5440	41
2765	5710	43
2900	5980	45
3035	6250	47
3170	6520	49

Double leaf		
Centre distance pulleys (I)	**Length belt**	**f**
1940	4060	30
2050	4280	32
2160	4500	34
2270	4720	35
2380	4940	37
2490	5160	39
2600	5380	41
2860	5900	45
3120	6420	49
3380	6940	53
3640	7460	57
3900	7980	61
4160	8500	65
4420	9020	69
4680	9540	73
4940	10060	77
5200	10580	81

11.3 ADJUSTING THE MECHANICAL STOPS

The adjustment of the mechanical stops is indispensable for correct operation of the automation.

The carriages must come into contact with the mechanical stops positioned at stroke end in opening and closing.

STOPS ON OPENING

1. Loosen the 2 grub screws ✎**57**-① to release the mechanical stop.
2. Open the leaf completely ✎**58**-①.
3. Bring the pad of the mechanical stop and the carriage into contact ✎**58**-②.
4. Tighten the 2 grub screws to lock the mechanical stop ✎**57**-①.

DOUBLE LEAF CLOSING STOPS

In double leaf automations, the leaves must close at the head section centre line.

1. Move the leaves in the closed door position.
2. For each leaf, ensure the carriage is in full contact with the closing stop pad.

Should adjustment be required:

3. Bring the pad of the mechanical stop and the carriage into contact ✎**58**-②.
4. Tighten the 2 grub screws to lock the mechanical stop ✎**57**-①.

SINGLE LEAF CLOSING STOPS

With closed door the carriage must be in full contact with the mechanical stop.

1. Loosen the 2 grub screws to release the mechanical stop ✎**57**-①.
2. Close the leaf.
3. Bring the pad of the mechanical stop and the carriage into contact ✎**58**-②.
4. Tighten the 2 grub screws to lock the mechanical stop ✎**58**-①.

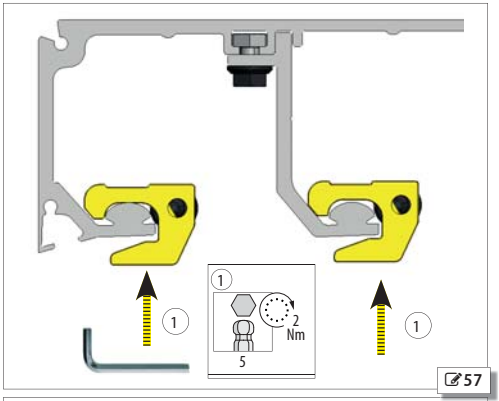

✎**57**

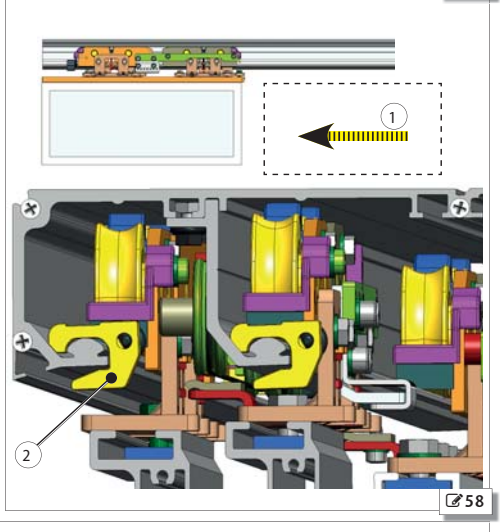

✎**58**

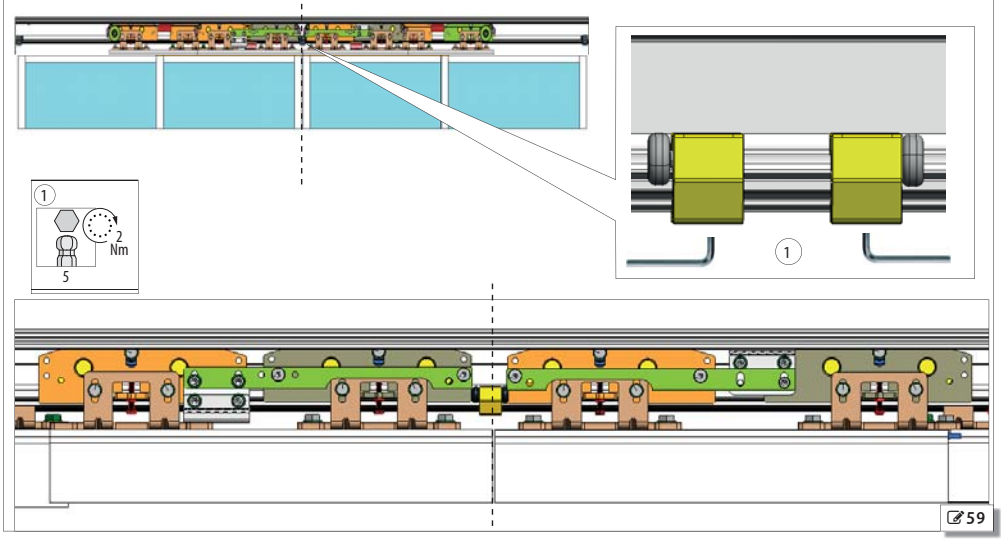

✎**59**

11.4 MOUNTING THE SIDE PROFILES

The side covers are a necessary element to assure stiffness and resistance of the overall telescopic profile structure. These features cannot be assured in the event of omitted assembly.

1. Place 3 plates on the support profile **60**-①.
2. Apply the sides to the ends of the support profile.
3. Fasten each side profile using the 3 screws provided **60**-②.

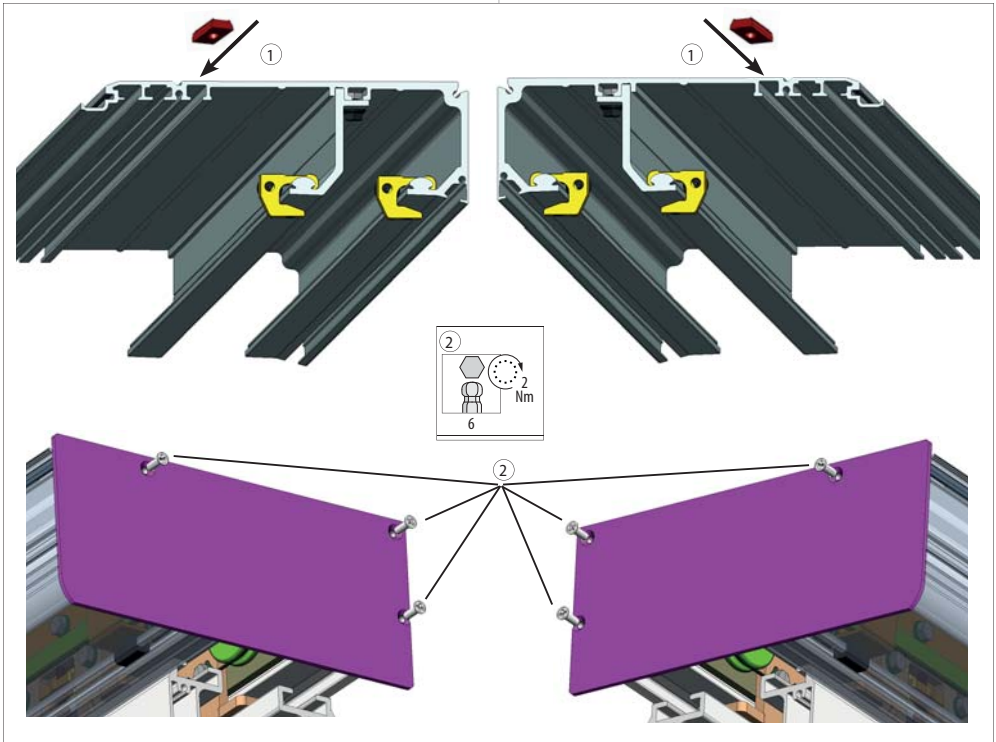

60

11.5 INSTALLING THE CASING BRACKETS

1. Mount the 3 brackets and fasten them with the screws provided **61**-②.

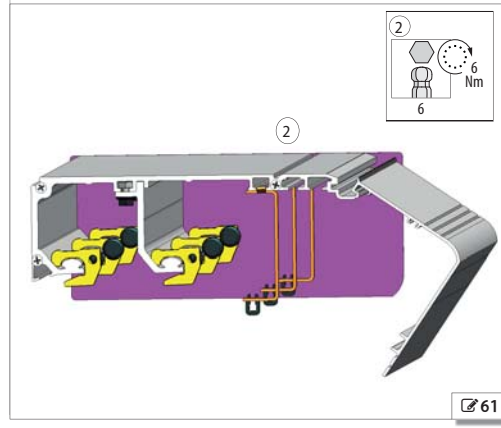

61

11.6 FITTING THE COVER

On the profile there must be:
- the safety cables ✎**62**-⑤
- the spacers ✎**62**-①
- the side profiles ✎**60**-② and the cover fastening brackets ✎**62**

1. Place the cover on the profile ✎**61**.
2. Hold the cover in the open position ✎**62**-③④ (lift it, then push it into the profile).
3. Fasten the safety cables to the cover ✎**62**-⑤ and close the cover.

The safety cables must be correctly installed to protect from the risk of accidental casing fall.

Slightly push on the casing to insert the blocks into the brackets ✎**62**-⑥.

The markings on the casing allow it to be adapted to varying leaf thickness. The breaking points ✎**62**-⑦ make it possible to remove the profile section in excess.

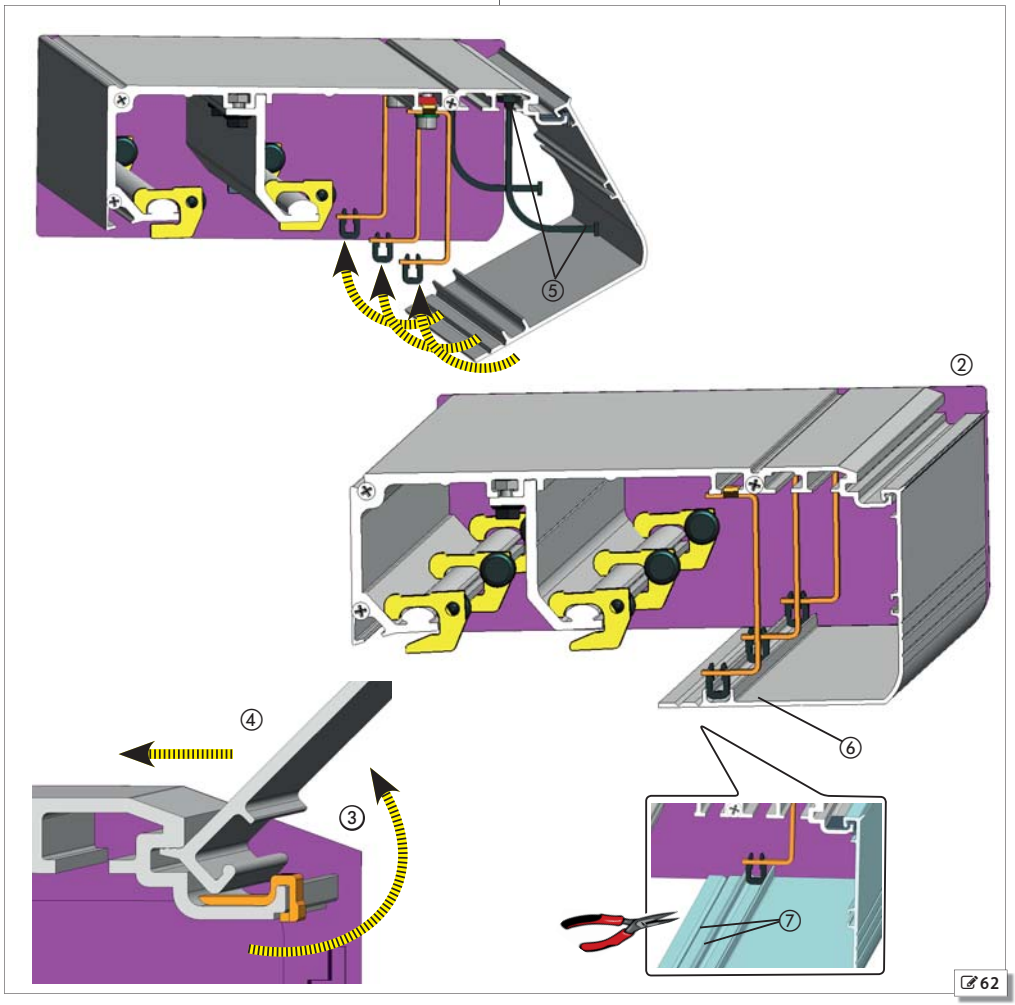

✎62

11.7 INSTALLING THE MOTOR BLOCK

1. Install the motor block by engaging the retaining hook ① in the slot ② of the motor block ✎**63**.
2. Close the leaves.
3. Manually push the lever ✎**64**-① towards the motor shaft. Check correct coupling.
4. Move the motor block lever to check the clearance between the motor shaft and the motor block coupling ✎**64**-②. If it is incorrect, adjust it as described below. ✎**64**-③.
5. After making sure that it is, tighten screw ✎**63**-④.

To disassemble the motor block:

Release the motor retainer hook carefully so as not to break it; use a flat-head screwdriver to prise the retainer hook away from the motor block ✎**63**-①.

11.8 ADJUSTING THE MOTOR BLOCK

1. Loosen the two screws ✎**64**-③ that connect the belt fitting to the carriage (on both carriages in the case of a double leaf).
2. Slightly move the belt fitting horizontally until there is clearance between the coupling of the motor shaft and the motor block by moving the motor block lever ✎**63**-②; re-tighten the previously loosened screws.
3.

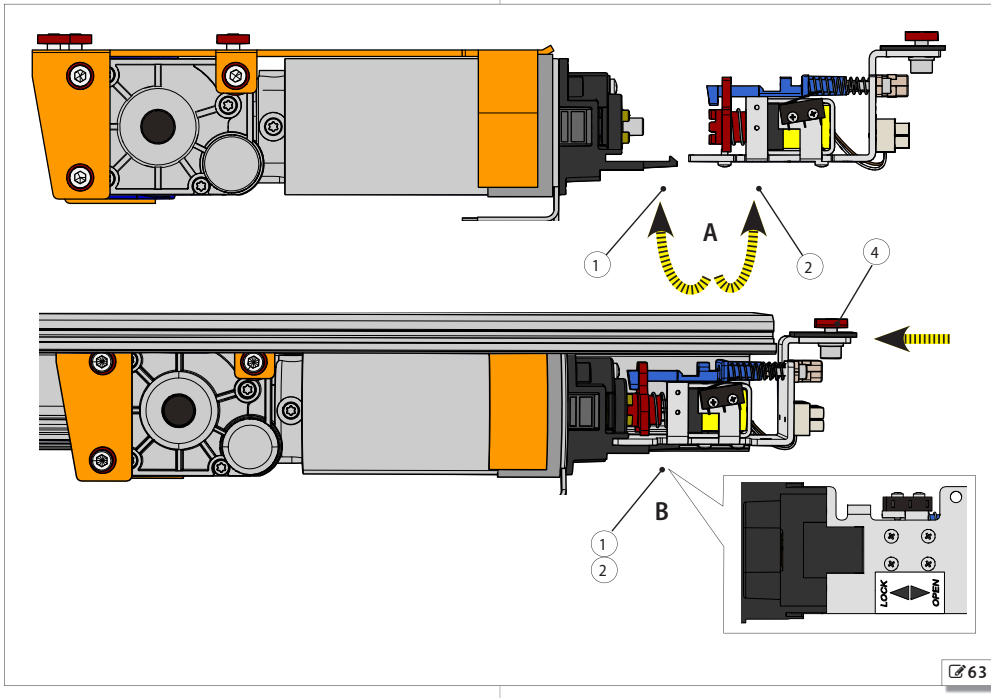

✎**63**

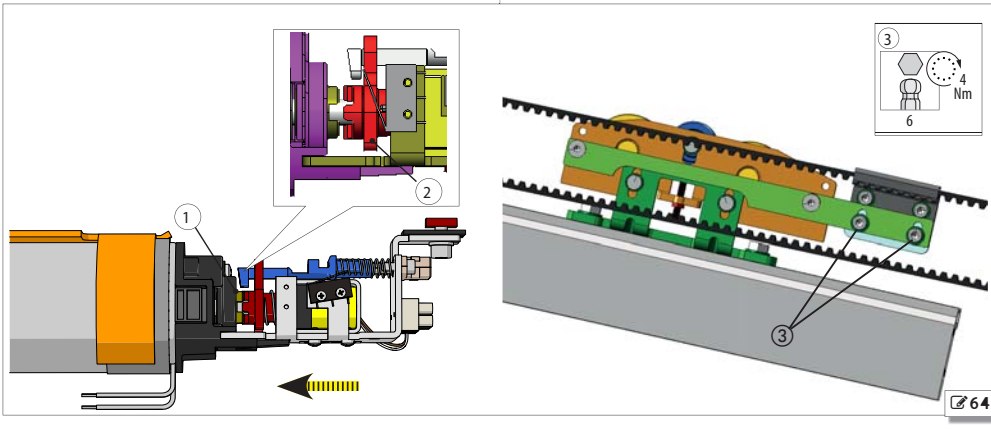

✎**64**

11.9 MOUNTING THE MOTOR BLOCK

XM BLOCK

1. Install the motor block by engaging the retaining hook ① in the slot ② in the slot ✎**65**.
2. Check that the motor block is properly engaged ✎**65**-③.
3. Adjust the monitoring micro switch support and check the switching of the micro switch contact ✎**65**-⑤.
4. After making sure that it is, tighten screw ✎**65**-④.

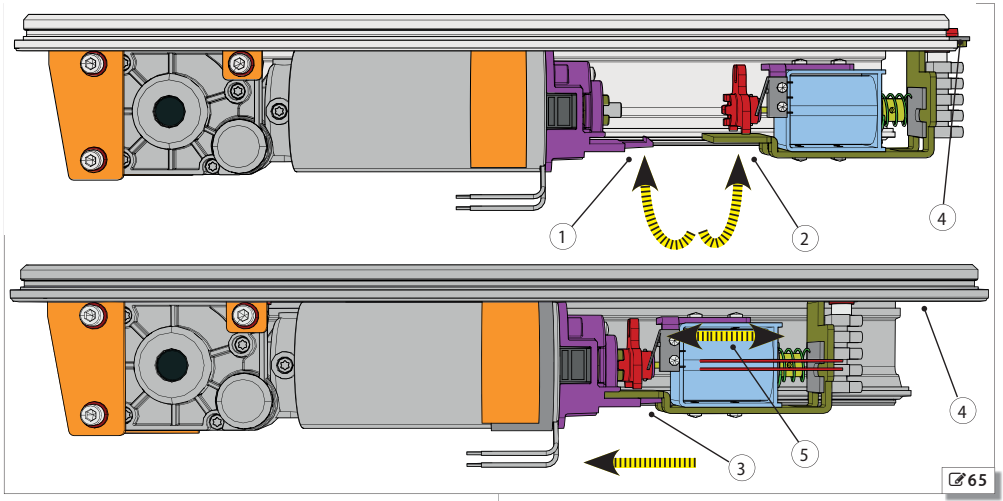

✎**65**

11.10 MOUNTING THE CABLE GLAND GUIDES

⚠ The guides prevent interference between cables and moving parts.

Install the electric cable guides inside the support profile ✎**66**-① and ②).

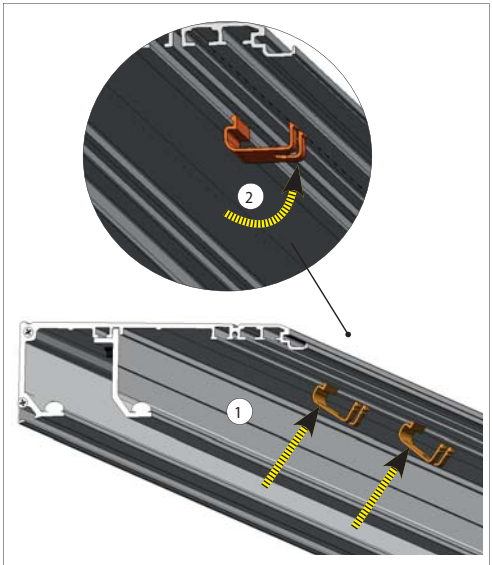

✎**66**

12. MAINTENANCE

In order to keep the system operating safety and efficiently and to reduce the number of malfunctions and breakdowns, routine maintenance and the periodic replacement of parts must be carried out as indicated in ▦ **10**.

ROUTINE MAINTENANCE must be performed every 6 months.

Frequency of replacements is indicated based on number of operation cycles for components subject to wear; in years for components subject to deterioration.

All maintenance operations must exclusively be performed by technical-professional personnel.

Only the installer/maintenance technician is authorised to open the casing to access the automation housing.

▦ **10** Maintenance programme and periodic replacements

12.1 CALCULATION ESTIMATE OF CYCLES PERFORMED

If there is a E1SL board fault and the cycle counter data is lost with error code 53, the number of cycles performed since the last service should be estimated.

R1 = number of days elapsed since the last motor replacement (see SYSTEM REGISTER)

R2 = number of hours of operation per day

R3 = door cycle time (opening time + pause + closing time)

The installer must take on responsibility for indicating parameters R1, R2 and R3

Calculate:

R4 = R1 * R2 *3600

Calculate the ESTIMATED NUMBER OF CYCLES:

R4 / R3

Then enter the calculated number of cycles from the SDK EVO in Menu 5 Cycle counter, Maintenance section 🔗 **50**

ROUTINE MAINTENANCE

OPERATION		
Check automation fastening to the wall	check the support profile is solidly secured to the wall in case of installation with self-supporting Head Section: check screws securing the support profile to the self-supporting profile and the screws of side wall fixings	- 🔗 **19** 🔗 **29**
Check the fastening of the Motor and return Pulley	check screws securing the motors on the support profile	🔗 **22**
Check on carriages	check screws securing to the leaf check and adjust the counter wheels of carriages and leaf depth and height screws	🔗 **32** 🔗 **33**
Check mechanical stops	check position of mechanical stops and fixing screws	🔗 **45**
Belt tensioning check	check belt tensioning	🔗 **43**
Cleaning	clean: Sliding Guide; Lower Guide Shoe; Carriages	🔗 **52**
Functional system check	perform required checks and procedures to ensure integrity of the load bearing structure and leaf frames perform functional checks	🔗 **16** 🔗 **53**

PERIODIC REPLACEMENTS

🔗 **20**

PART/COMPONENT	FREQUENCY Operation cycles	 Time (years)	Replacements Recommended / Mandatory
Motor	1 000 000	--	Recommended
DM Motor	1 000 000	--	Recommended
Plastic motor spacers	2 000 000	--	Recommended
Return pulley	1 000 000	--	Recommended
Lower guide shoe	2 000 000	--	**Mandatory**
Carriages	2 000 000	--	**Mandatory**
DM Carriage Wheels	2 000 000	--	**Mandatory**
Belt	1 000 000	5	**Mandatory**
Limit switch rubber pads	2 000 000	5	**Mandatory**
Safety fall arrest cables	--	5	**Mandatory**
Emergency battery	--	1	Recommended

12.2 MAINTENANCE TECHNICIAN SAFETY

RISKS

PERSONAL PROTECTIVE EQUIPMENT

REQUIRED TOOLS

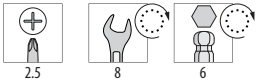

Before any maintenance operation, disconnect the mains power supply and disconnect the emergency battery.

The installer/maintenance technician is bound to comply with the safety instructions and recommendations provided in this manual.

Signal maintenance work in progress and prevent access to the area.

Do not leave the work site unattended.

The work area must be kept tidy and clear upon completing maintenance.

Do not proceed with modifications or repairs of any motorisation component.

The repairs must exclusively be performed by an Authorised Repair Centre.

The warranty shall be forfeited in the event of tampering with components.

Only use original FAAC spare parts.

The batteries and electronic components must not be disposed of with household waste but delivered to authorised disposal and recycling centres.

12.3 REPLACEMENTS

Per 2 million cycles

1. Remove the belt after loosening it from the leaf fittings.
2. Remove each motor from its support after removing the screws ✎**67**-①-②-③.
3. Loosen the screws ✎**68**-① of each carriage and lower the leaves to the ground using screw ②.
4. Disconnect the leaves from the carriages by removing the screws ✎**68**-①.
5. Temporarily store the leaves away, using all precautions to prevent risks of fall.
6. Loosen the screw ✎**68**-③ and lower the counter wheel in order to remove each carriage.
7. Remove the mechanical stops.
8. Remove the lower guide shoe.
9. Install the new shoe **31**.
10. Install the vibration damper rubbers onto the support.
11. Assemble the new motors on their support.
12. Tighten the screws ✎**67**-①-②-③.
13. Install the new mechanical stops **20**.
14. Install the new carriages onto the leaves **32**.
15. Install and adjust the leaves **32** **38**.
16. Install and adjust the new belt **42** **43**.
17. Adjust the new mechanical stops **45**.

For 1 million cycles

Perform steps 1, 2, 11, 12, 13 and 18 of the sequence for 2 million cycles.

Belt replacement

Only perform steps 1 and 9 of the sequence for 2 million cycles.

Replacement of mechanical stops

Only perform steps 7 and 19 of the sequence for 2 million cycles.

Replacement of safety cables

1. Remove the safety cables from the casing.
2. Install the new cables **22** and **47**.

Emergency battery replacement

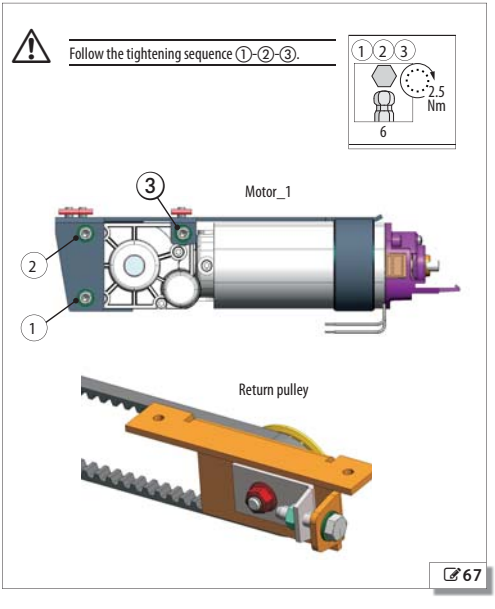

✎67

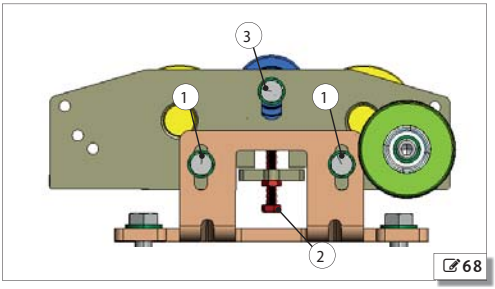

✎68

ENGLISH

Translation of the original instructions

Before proceeding, disconnect mains power supply.

If battery charge is insufficient, automation operation is prevented; the door remains OPEN (ERROR status) until the emergency battery charging cycle is completed. Only SETUP may be performed in any case despite the battery being down.

It is recommended to charge the emergency batteries before commissioning, to avoid waiting time for the charging cycle after performing SETUP.

The battery must be only charged using the electronics module for A1400 AIR T.

1. Disconnect the battery from the board E1SL.
2. Unscrew the 2 screws with washer **69**-① and remove the battery.
3. Install the new battery **69**-①.
4. Connect the battery to the board E1SL.

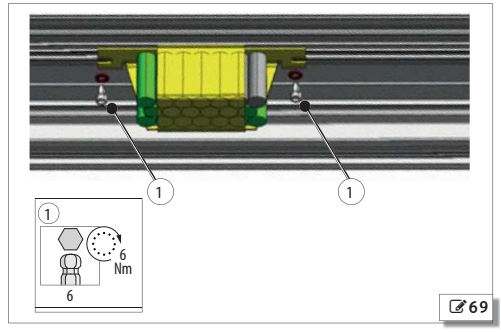

Electronic board replacement

Before proceeding, disconnect the mains power supply and disconnect the emergency battery.

The block including the main and auxiliary board must be replaced. NEVER intervene on the components of the board!

It is recommended to download the data to a USB storage device in order to upload it (update) to the new board **52**.

1. Remove all connections.
2. Remove the screw **70**-① and the screw with washer **70**-②.
3. Remove the board from the support.
4. Insert the new board in the seats **70**-③.
5. Fasten using the screw ① and screw ② with washer ④.

The washer **70**-④ ensures that the board is earthed.

6. Restore all connections.
7. Program the new board.

If programming files that were previously saved to a USB storage device are available, upload (update) these to the board **52**.

8. Carry out the SETUP procedure **52**.

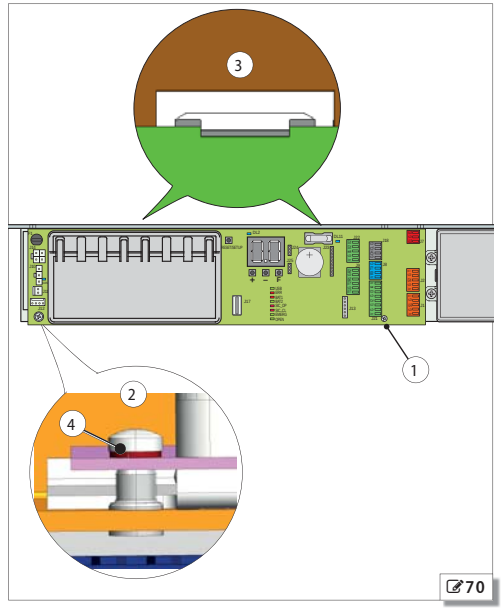

Replacing the fuses

Before proceeding, disconnect the mains power supply and disconnect the emergency battery.

1. Remove the fuse F1 by pressing and turning anti-clockwise. Remove fuses F2 and F3 by gently using a screwdriver as a lever.
2. Assemble the new fuse.

Only use the fuses indicated **71**.

12.4 CLEANING

Before any maintenance operation, disconnect the mains power supply and disconnect the emergency battery.

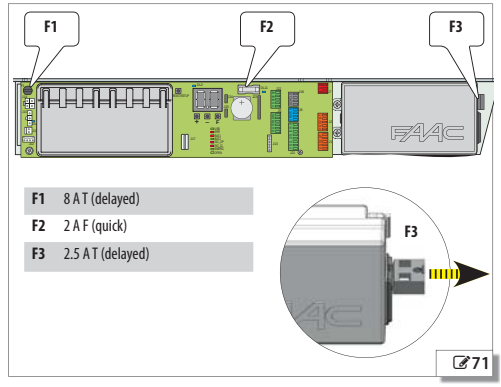

Before starting to clean, wait for the components subject to overheating to cool down.

DO NOT use detergents on optical devices and electronic displays (e.g. photocell lenses).

Do not moisten parts. In particular, do not moisten electrical connections and components in any way.

NEVER use direct water and compressed air jets neither for cleaning nor drying.

Ensure all components are dry after cleaning.

Use clean soft cloths to remove dust. Moisten the cloth to remove dirt. Dry parts with clean, dry and soft cloths.
For parts that are hard to reach, use brushes with soft bristles.

Cleaning products for plastic material parts
With the exception of optical devices and electronic displays, water and neutral detergent solutions are allowed (in the concentration indicated by the manufacturer). Use detergents at ambient temperature (max. 30°C).
DO NOT use alkaline, acid or base solutions, benzene, acetic acid or solvents of any kind: these products may damage the surfaces of the materials.

Cleaning products of steel or aluminium parts
Water and neutral detergent solutions are allowed (in the concentration indicated on the detergent packaging). 95% methylated spirit diluted at 50%. In case of oily dirt, use 70% solutions of isopropyl alcohol.
DO NOT use solutions of acetic acid, acid or base solutions, ethyl alcohol.

12.5 FUNCTIONAL CHECKS

Connect power supply and emergency battery only after tidying up the area.

In case of failures or malfunction, please refer to **53** and **53**.

Command some movements to check correct operation:

- movements correctly executed, according to logics and settings
- regular and smooth leaf movement
- end of run slowing down correctly executed
- approaching the opening and closing stops without impact
- regular operation of motor block on Motor_1 (if present)
- working efficiency of emergency battery: disconnect the mains power supply and ensure that the door opens and remains open (safety condition)
- efficiency of safety detectors (the radar field must be free and adequately sized with respect to passage flow)
- operation of EMERGENCY button (if present) and any other accessories installed.

13. WASTE DISPOSAL

After taking down the automation, dispose of it in compliance with the material disposal regulations in force.

The constructive components must not be disposed of with household waste but delivered to authorised disposal and recycling centres.

14. ATTACHMENTS

11 Automation weights

Single leaf Vp [mm]	Lt [mm]	Support profile weight [kg - approximate values]	TOTAL weight [kg]
1100	1750	10	25
1200	1900	11	26
1300	2050	12	27
1400	2200	13	28
1500	2350	14	29
1600	2500	15	30
1700	2650	16	31
1800	2800	17	32
1900	2950	18	33
2000	3100	19	34
2200	3400	20	35
2400	3700	22	37
2600	4000	24	39
2800	4300	26	41
3000	4600	28	43

Double leaf Vp [mm]	Lt [mm]	Support profile weight [kg - approximate values]	TOTAL weight [kg]
1400	2200	13	31
1500	2350	14	32
1600	2500	15	33
1700	2650	16	34
1800	2800	17	35
1900	2950	18	36
2000	3100	19	37
2200	3400	20	38
2400	3700	22	40
2600	4000	24	42
2800	4300	26	44
3000	4600	28	46
3200	4900	30	48
3400	5200	31	50
3600	5500	33	51
3800	5800	35	53
4000	6100	37	55

12 Positions of components on the head section

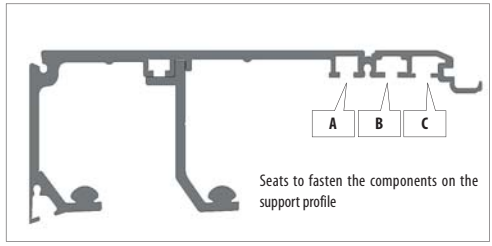

Electronics module B

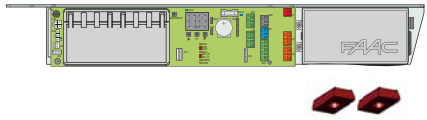

Motor A-B

Return pulley A

Emergency battery A

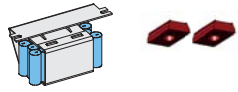

Cover fastening brackets B and Safety cables C

Internal release (optional component) A

14.1 INSTALLATION DIAGRAMS

A1400 AIR T WITH TK20 2 MOBILE LEAVES AND ONE FIXED LEAF

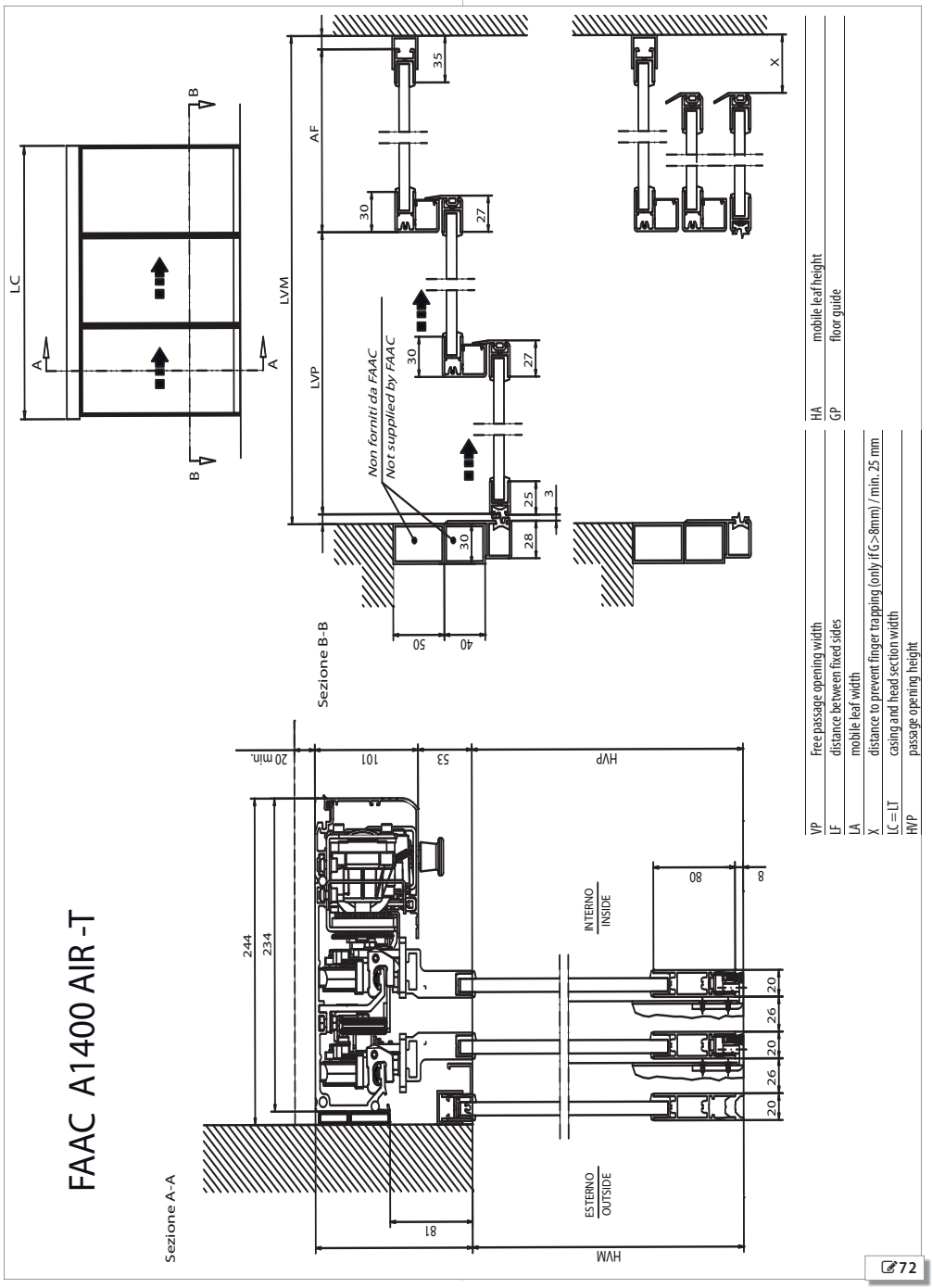

VP	Free passage opening width	HA	mobile leaf height
LF	distance between fixed sides	GP	floor guide
LA	mobile leaf width		
X	distance to prevent finger trapping (only if G>8mm) / min. 25 mm		
LC = LT	casing and head section width		
HVP	passage opening height		

72

ENGLISH

Translation of the original instructions

FAAC A1400 AIR -T

Sezione A-A

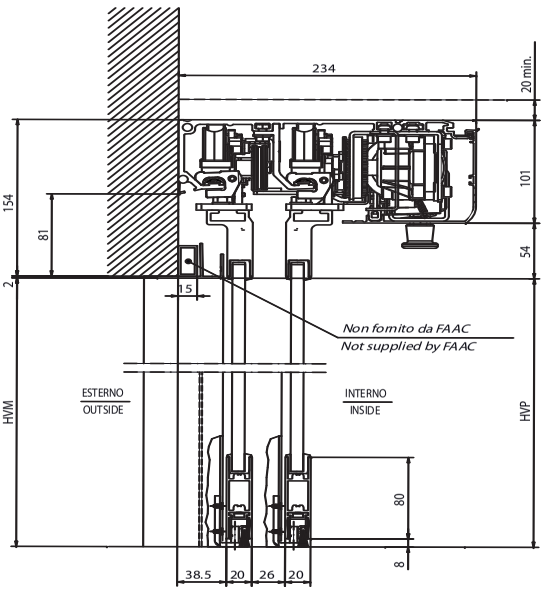

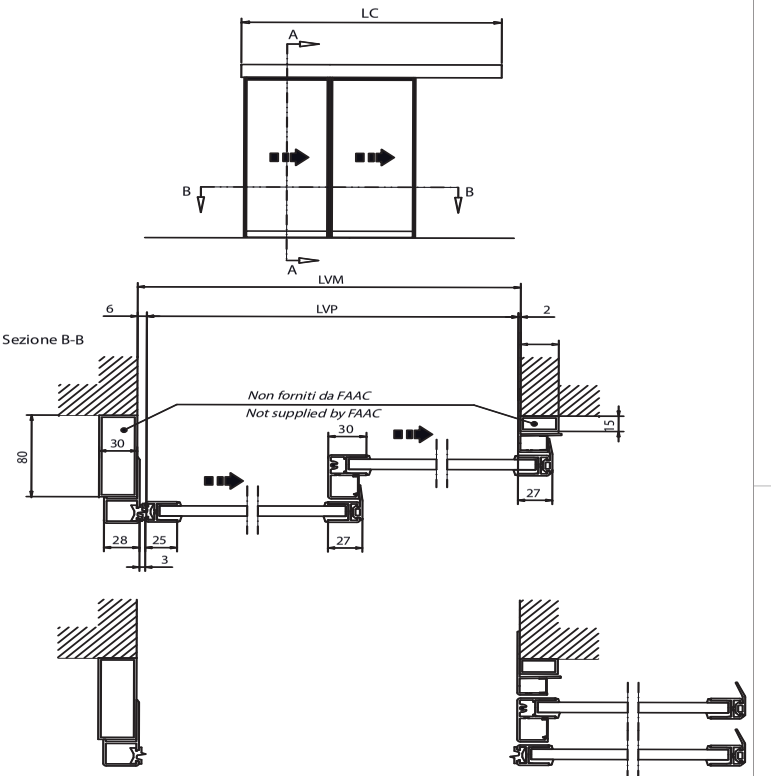

VP	Free passage opening width	HVP	passage opening height
LF	distance between fixed sides	LH	height under cover
LA	mobile leaf width	HA	mobile leaf height
X	distance to prevent finger trapping (only if G>8mm) / min. 25 mm	GP	floor guide
LC = LT	casing and head section width		

A1400 AIR T WITH TK20 4 MOBILE LEAVES

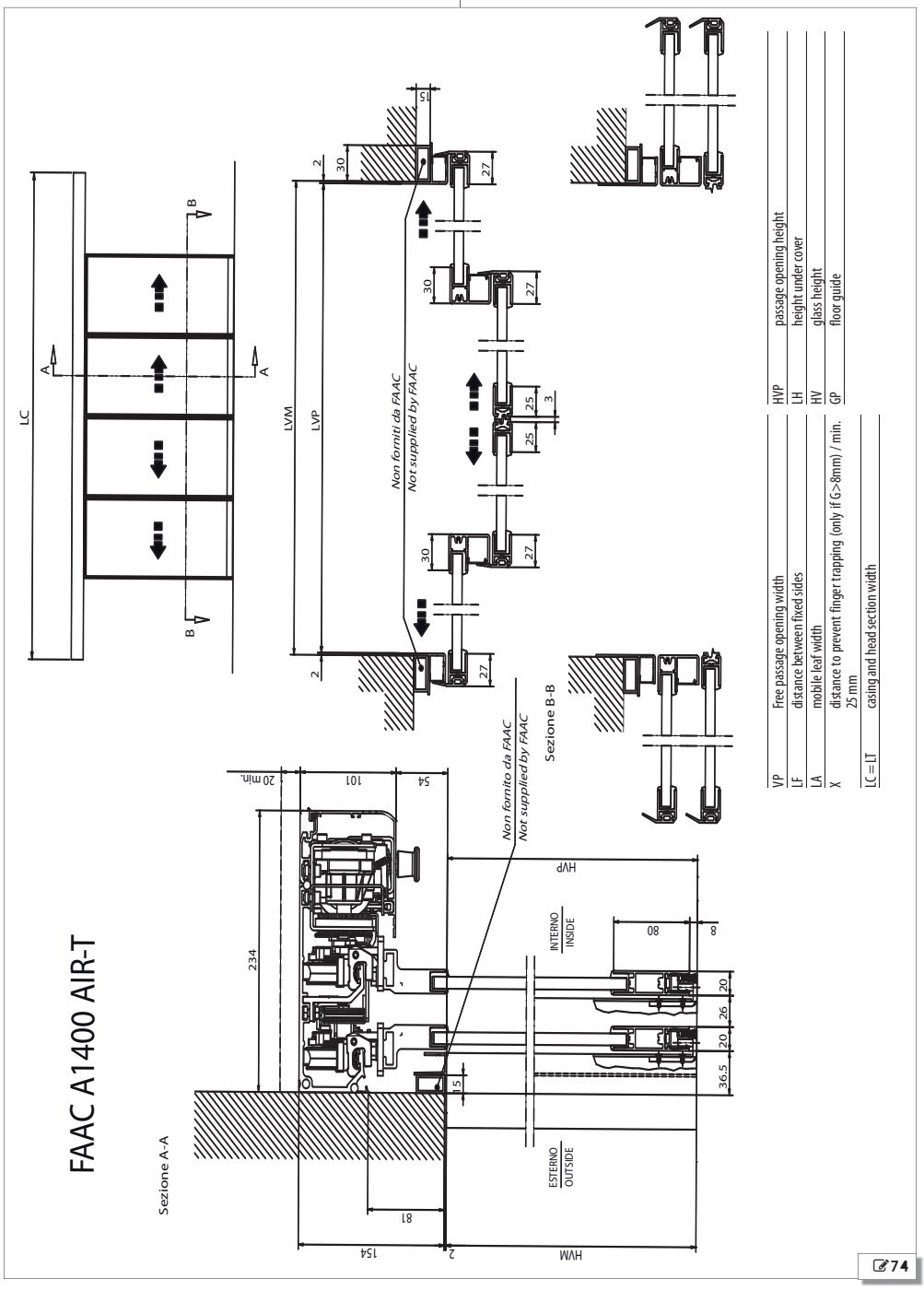

VP	Free passage opening width	HVP	passage opening height
LF	distance between fixed sides	LH	height under cover
LA	mobile leaf width	HV	glass height
X	distance to prevent finger trapping (only if G>8mm) / min. 25 mm	GP	floor guide
LC=LT	casing and head section width		

74

Translation of the original instructions

FAAC A1400 AIR-T

Sezione A-A

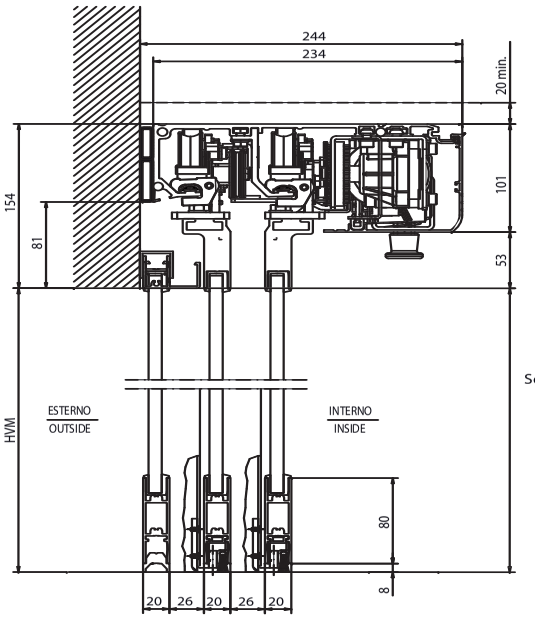

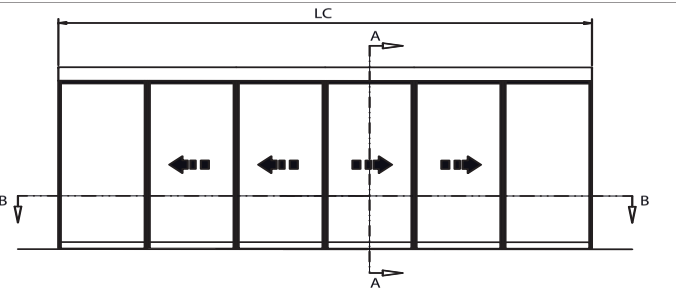

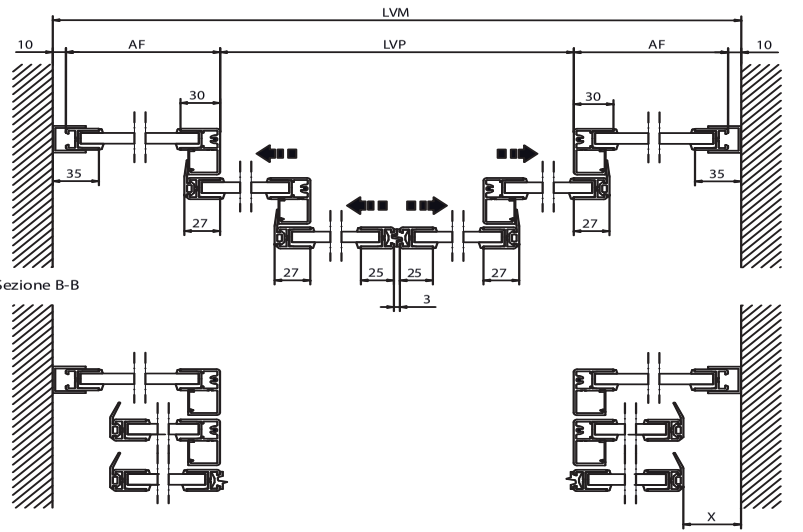

Sezione B-B

VP	Free passage opening width	HVP	passage opening height
LF	distance between fixed sides	LH	height under cover
LA	mobile leaf width	HV	glass height
X	distance to prevent finger trapping (only if G>8mm) / min. 25 mm	GP	floor guide
LC = LT	casing and head section width		

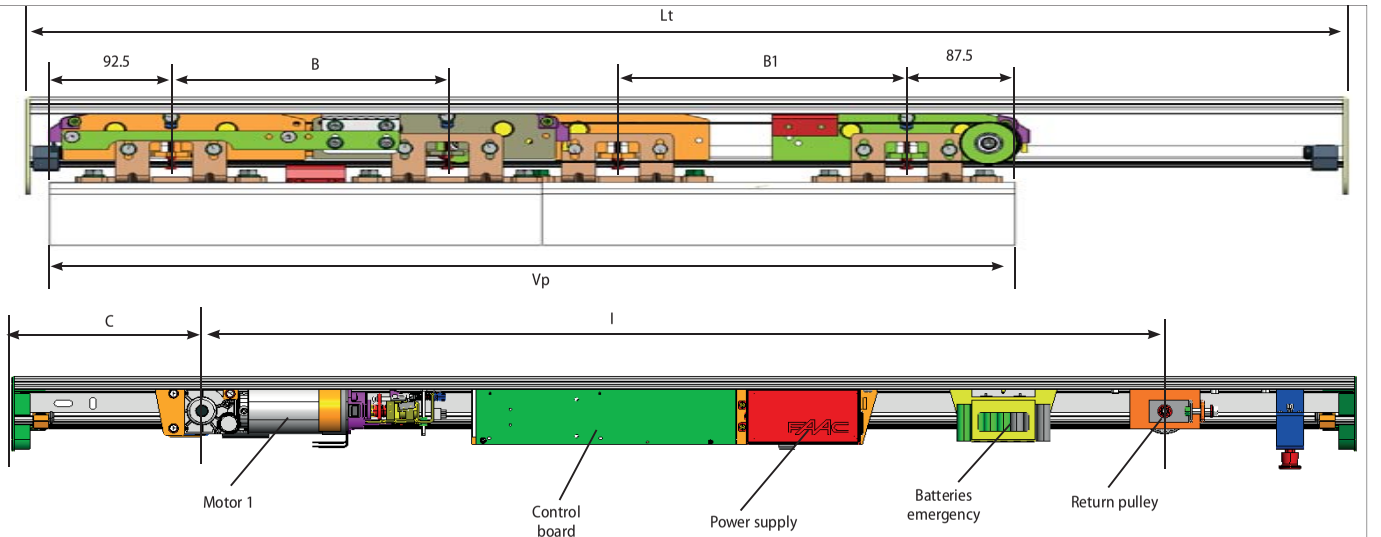

Lt = Vp X 1.5 + 100

B = Carriage fixing distance on the sliding leaf
B1 = Carriage fixing distance on the sliding leaf
C = Motor position
D = Transmission belt length
I = Motor / transmission unit centre distance
LC = Steel cable length
Lt = Head section length
Vp = Free passage opening
100 = leaf overlap (mm)

Vp	Lt	B	B1	I	C	D	LC
1100	1750	390	435	1270	170	2710	1750
1200	1900	440	485	1370	170	2910	1850
1300	2050	490	535	1470	170	3110	1950
1400	2200	540	585	1570	170	3310	2050
1500	2350	590	635	1670	170	3510	2150
1600	2500	640	685	1770	170	3710	2250
1700	2650	690	735	1870	170	3910	2350
1800	2800	740	785	1970	170	4110	2450

Vp	Lt	B	B1	I	C	D	LC
1900	2950	790	835	2070	170	4310	2550
2000	3100	840	885	2170	170	4510	2650
2200	3400	940	985	2370	170	4910	2850
2400	3700	1040	1085	2570	170	5310	3050
2600	4000	1140	1185	2770	170	5710	3250
2800	4300	1240	1285	2970	170	6110	3450
3000	4600	1340	1385	3170	170	6510	3650

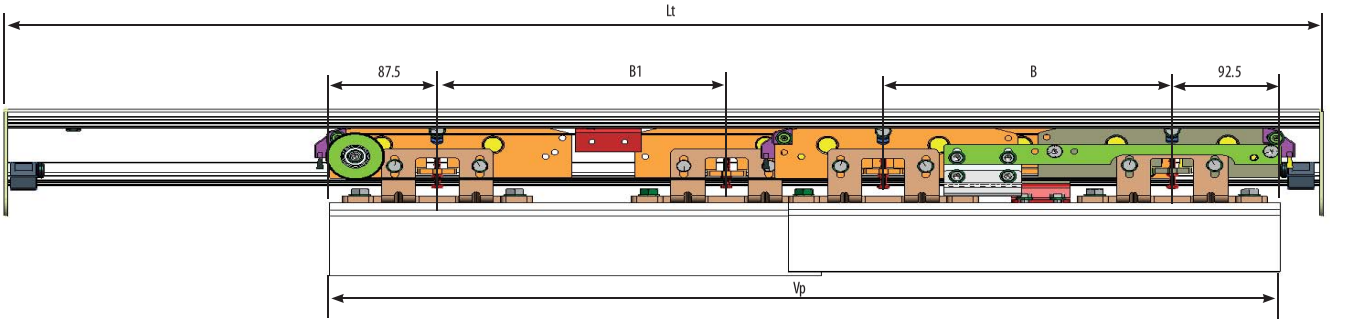

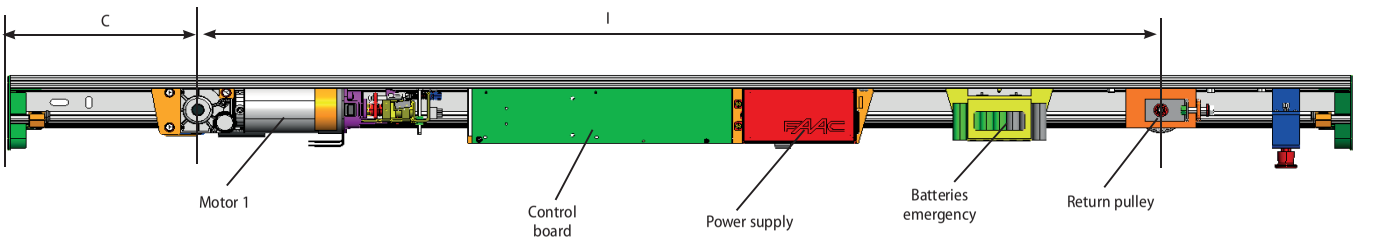

Lt = Vp X 1.5 + 100

B = Carriage fixing distance on the sliding leaf
B1 = Carriage fixing distance on the sliding leaf
C = Motor position
D = Transmission belt length
I = Motor / transmission unit centre distance
LC = Steel cable length
Lt = Head section length
Vp = Free passage opening
100 = leaf overlap (mm)

Vp	Lt	B	B1	I	C	D	LC
1100	1750	390	435	1270	170	2710	1750
1200	1900	440	485	1370	170	2910	1890
1300	2050	490	535	1470	170	3110	1990
1400	2200	540	585	1570	170	3310	2090
1500	2350	590	635	1670	170	3510	2190
1600	2500	640	685	1770	170	3710	2290
1700	2650	690	735	1870	170	3910	2390
1800	2800	740	785	1970	170	4110	2490

Vp	Lt	B	B1	I	C	D	LC
1900	2950	790	835	2070	170	4310	2590
2000	3100	840	885	2170	170	4510	2690
2200	3400	940	985	2370	170	4910	2890
2400	3700	1040	1085	2570	170	5310	3090
2600	4000	1140	1185	2770	170	5710	3290
2800	4300	1240	1285	2970	170	6110	3490
3000	4600	1340	1385	3170	170	6510	3690

A140 AIR Telescopic Single Leaf, Right Opening

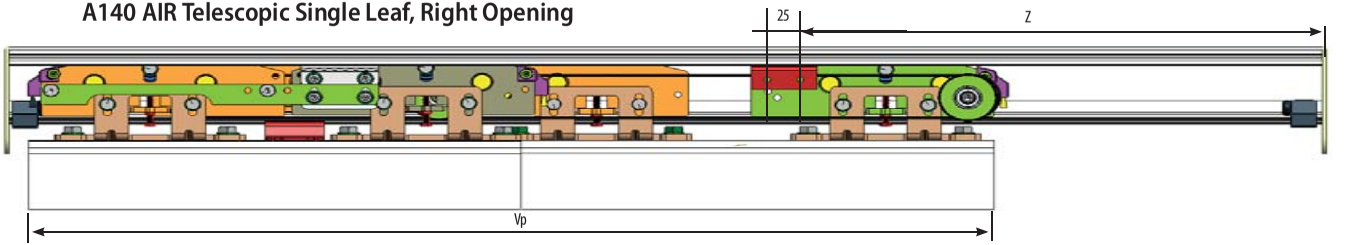

A140 AIR Telescopic Single Leaf, Left Opening

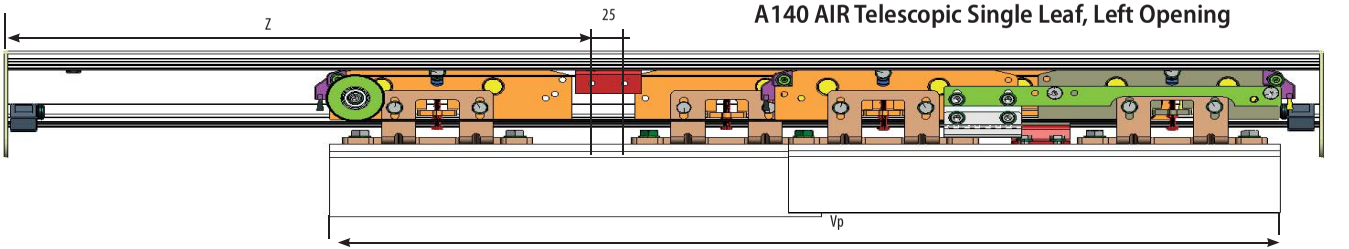

TEMPLATE FOR DRILLING THE TELESCOPIC PROFILE AND CUTTING THE TELESCOPIC PROFILE FIXING ROD

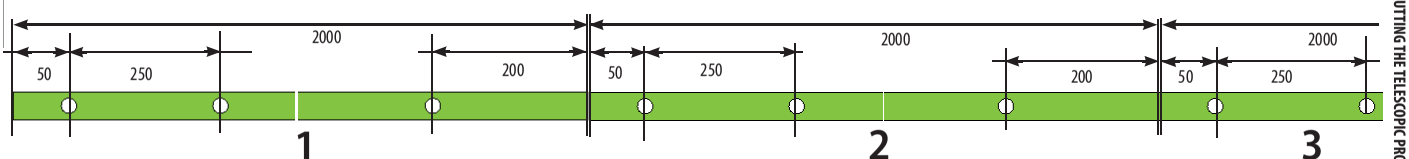

TABLE A

Vp	Lt	Z
1100	1750	750
1200	1900	800
1300	2050	850
1400	2200	900
1500	2350	950
1600	2500	1000

Vp	Lt	Z
1700	2650	1050
1800	2800	1100
1900	2950	1150
2000	3100	1200
2200	3400	1300
2400	3700	1400

Vp	Lt	Z
2600	4000	1500
2800	4300	1600
3000	4600	1700

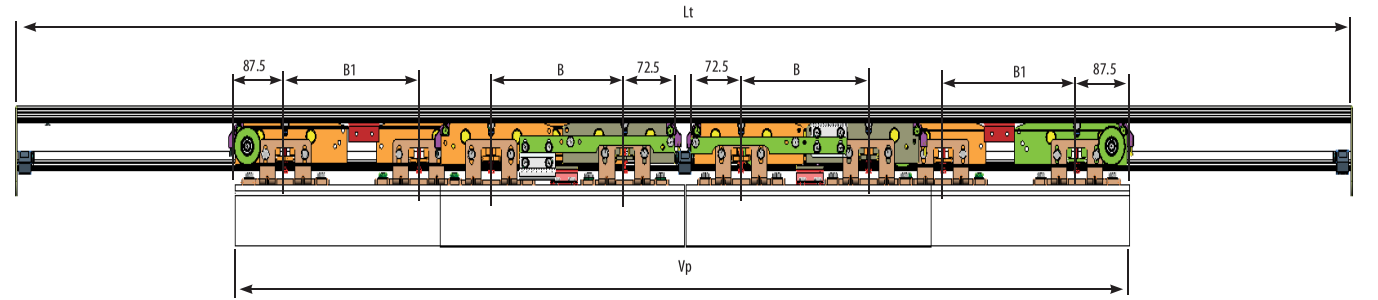

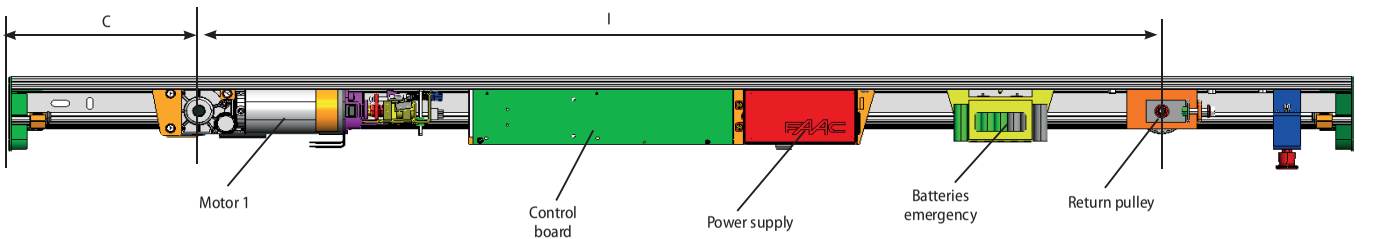

Lt = Vp X 1.5 + 100

B = Carriage fixing distance on the sliding leaf
B1 = Carriage fixing distance on the sliding leaf
C = Motor position
D = Transmission belt length
I = Motor / transmission unit centre distance
LC = Steel cable length
Lt = Head section length
Vp = Free passage opening
100 = leaf overlap (mm)

(* Parameter LC in the double leaf is the sum of right leaf and left leaf)

Vp	Lt	B	B1	I	C	D	LC
1400	2200	205	220	1960	120	4090	*
1500	2350	230	245	2100	130	4370	*
1600	2500	255	270	2200	150	4570	*
1700	2650	280	295	2310	170	4790	*
1800	2800	305	320	2420	190	5010	*
1900	2950	330	345	2530	210	5230	*
2000	3100	355	370	2640	230	5450	*
2200	3400	405	420	2860	270	5890	*

Vp	Lt	B	B1	I	C	D	LC
2400	3700	455	470	3080	310	6330	*
2600	4000	505	520	3300	350	6770	*
2800	4300	555	570	3520	390	7210	*
3000	4600	605	620	3740	430	7650	*
3200	4900	655	670	3960	470	8090	*
3400	5200	705	720	4180	510	8530	*
3600	5500	755	770	4400	550	8970	*
3800	5800	805	820	4620	590	9410	*
4000	6100	855	870	4840	630	9850	*

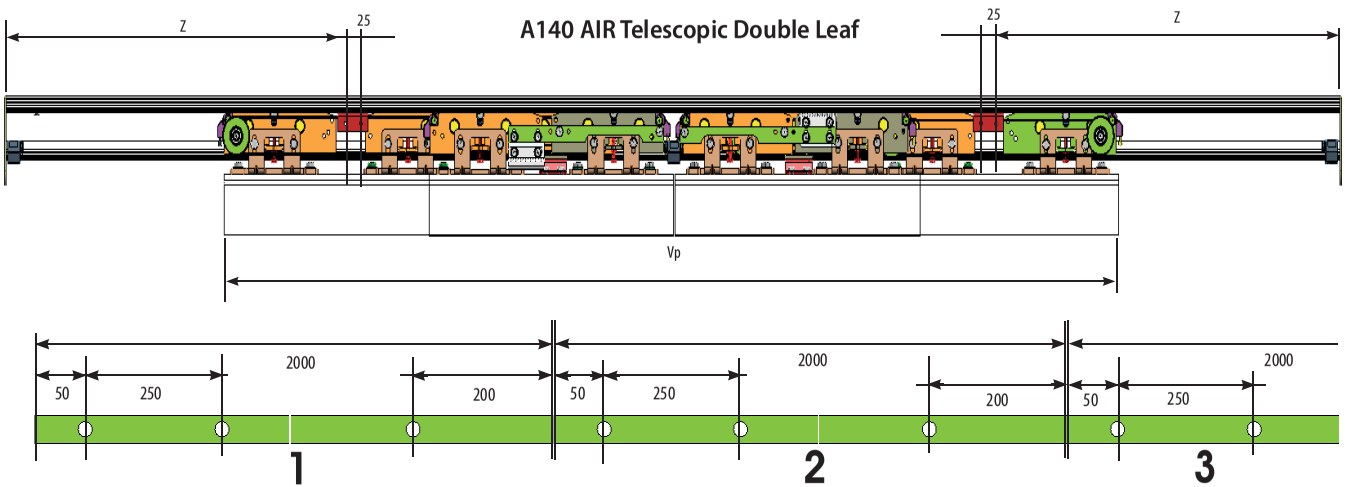

TABLE B

Vp	Lt	Z
1400	2200	525
1500	2350	550
1600	2500	575
1700	2650	600
1800	2800	625
1900	2950	650

Vp	Lt	Z
2000	3100	675
2200	3400	725
2400	3700	775
2600	4000	825
2800	4300	875
3000	4600	925

Vp	Lt	Z
3200	4900	975
3400	5200	1025
3600	5500	1075
3800	5800	1125
4000	6100	1175

USER'S GUIDE A1400 AIR T

SAFETY RECOMMENDATIONS
The A1400 AIR T automation, if correctly installed, maintained and used, guarantees a high level of safety.

GENERAL SAFETY RECOMMENDATIONS
The operator in charge of using the automation is responsible for running the system and must:

carefully read the instructions before using the product and store them for future use

comply with all Operating instructions and Safety recommendations

store the instructions of the products installed

prevent the control devices from being used by persons not expressly authorised and instructed

prevent access to the control devices to persons under age or with reduced psycho-physical abilities, unless under supervision by an adult responsible for their safety

not use the system in case of malfunctioning. If the system malfunctions, the user must not attempt any kind of repair or take any direct action. He/she must request intervention by the installer/maintenance technician.

make sure the system's maintenance is carried out according to the instructions provided in this manual.

must be in good psycho-physical conditions, aware of and responsible about the hazards that may be engendered when using a machine.

the required level of ambient lighting must be equal to at least 200 lux

store the system Register filled in at the end of every maintenance operation by the installer/maintenance technician

Routine and planned maintenance

In order to keep the system operating safety and efficiently and to reduce the number of malfunctions and breakdowns, ROUTINE MAINTENANCE and the PERIODIC REPLACEMENT of parts must be carried out as indicated in the A1400 AIR T manual.

All maintenance operations must exclusively be performed by technical-professional personnel.

Only the installer/maintenance technician is authorised to open the casing to access the automation housing.

ROUTINE MAINTENANCE must be performed every 6 months.

Frequency of REPLACEMENTS is indicated based on number of operation cycles for components subject to wear; in years for components subject to deterioration.

USE
The FAAC series A1400 AIR T systems are designed to automatically operate, manage and control linear horizontal motion one- or two-leaf sliding doors.
The A1400 AIR T series automations are designed to automate entry doors that are used exclusively for pedestrian traffic.
They are compliant with standard EN 16005:2012.
They are suitable for indoor installation, for applications meeting the features detailed in the instruction manual.

No other use outside the ones set out above is allowed by the manufacturer.

FAAC declines all liability deriving from misuse or uses other than that for which the automation s intended.

Unauthorised use

- use the automation for uses other than THE INTENDED USE;
- use the automation with mobile and fixed guards tampered with or removed.

WARNINGS DURING NORMAL OPERATION
The following conditions can occur during normal operation of the door:

When the A1400 AIR T door changes from NIGHT-TIME or MANUAL mode to TWO-DIRECTION AUTOMATIC mode a system test is carried out immediately.

MANUAL OPERATION
Release manoeuvre
If it is necessary to manually actuate the internal release to manually open the door, proceed as follows:
To open the door, pull the red knob downwards and turn it anti-clockwise until it locks on the bracket Fig. 1.
To close the door, pull the red knob downwards to release it and turn it clockwise until it comes into contact with the bracket Fig. 1.

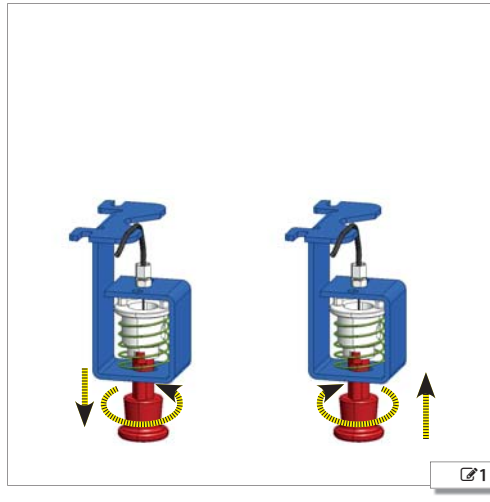

1

14.2 SELECTION MENU

1. To access the operating mode selection menu, press the corresponding button on the HOME PAGE .
2. With the selection buttons you can set:
   - the Automatic or Door open operation
   - Two-directional or Exit only mode
   - Total or Partial Opening option
3. To go back to the HOME PAGE use the OK button (the selections displayed are confirmed).

Automatic or Door open operation Automatic = opening via detector Open door = closure is inhibited	Automatic	Door open
Direction of travel Two-directional = the detectors are enabled for entry and exit Exit only = the detector is only enabled for exit Entry only = the detector is only enabled for exit	Two-directional	Exit only Entry only
Opening percentage 100% = Total opening % = Partial opening (percentage that can be modified by the program)	Total opening 100%	Partial opening %

example - automatic operation, only for exit, with partial Opening:

example - door open with total opening:

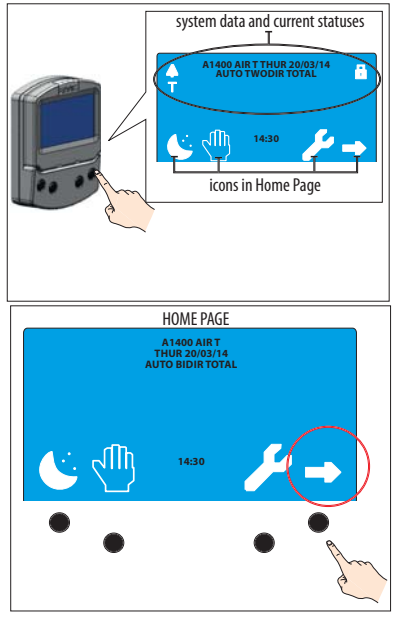

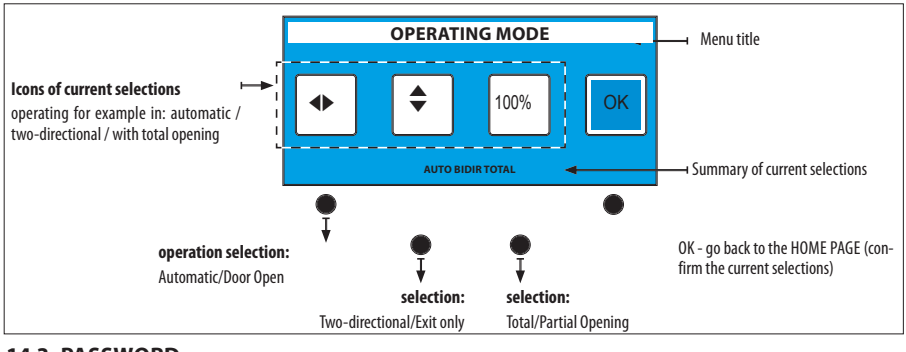

14.3 PASSWORD

The 4 digit **PASSWORD** has to be entered in order to use some of the functions.

- select the first digit using the ↑↓ buttons
- confirm via the OK button and it moves on to the next digit
- once the 4 digits have been entered, the password is recognised by the device as **OPERATOR** or **INSTALLER**.

The factory-set password is: 0000

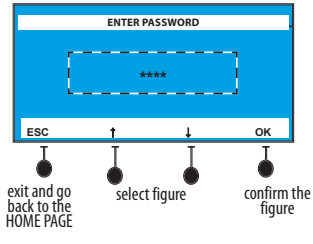

- In case of unrecognised password:
- the command is not executed
- the display shows "incorrect password"
- press OK to go back to the home page.

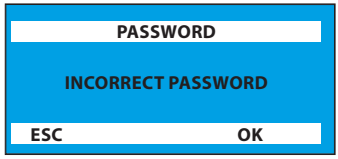

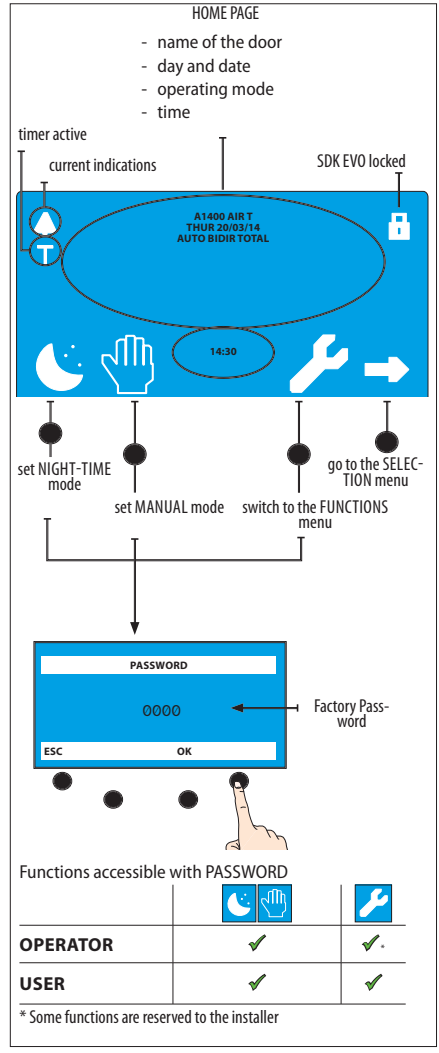

Functions accessible with PASSWORD

OPERATOR	✓	✓*
USER	✓	✓

* Some functions are reserved to the installer

14.4 SELECTION MENU

1. To access the operating mode selection menu, press the corresponding function button.
2. The following functions may be set with the selection buttons:

   - TOTAL TWO-DIRECTION AUTOMATIC
   - DOOR OPEN
   - AUTOMATIC TOTAL ONE-DIRECTION
   - AUTOMATIC PARTIAL TWO-DIRECTION AUTOMATIC
   - NIGHT
   - MANUAL

3. The LED switches on to identify the active function.

①		TOTAL TWO-DIRECTION AUTOMATIC
②		DOOR OPEN
③		AUTOMATIC TOTAL ONE-DIRECTIONAL
④		AUTOMATIC PARTIAL TWO-DIRECTIONAL
⑤		NIGHT
⑥		MANUAL

4. To switch to another function press the key corresponding to the new function.
5. If there is an alert, to display it 2 keys must be pressed simultaneously as indicated in the table:

LOCK / UNLOCK	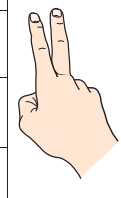	② + ⑤ 5 sec.
RESET		③ + ④
WARNINGS		① + ② continuous
FIRMWARE VERSION		⑤ + ⑥ continuous

6. The ALARMS are displayed with a code of flashing LEDs alternating with the current operating mode.
7. For the type of ALARM see **23** in the A1400 AIR manual.

1. The key combinations will allow special functions:
   - LOCK / UNLOCK
   - RESET
   - WARNINGS
   - FIRMWARE VERSION
2. The LEDs corresponding to WARNINGS will blink for as long as the keys are held.

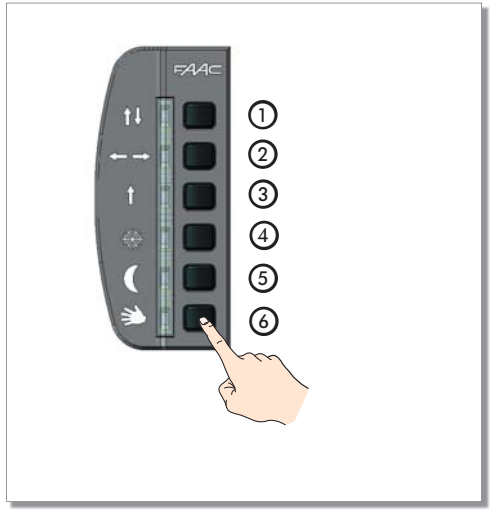

FAAC S.p.A. Soc. Unipersonale
Via Calari, 10 - 40069 Zola Predosa BOLOGNA - ITALY
Tel. +39 051 61724 - Fax +39 051 758518
www.faac.it - www.faacgroup.com